Uninterruptible Power Supply X2-Series Expansion Board

October 2025

Revision 004

X2BP10XPB *Uninterruptible Power Supply X2-Series Expansion Board*

Safety information 4
Qualified personnel 4
Hazard levels 4
Safety instructions 5
General safety instructions 5
Introduction 6
Features 7
Device identification 8
Hardware setup 9
Connections 9
The external UPS battery 9
Battery charger 10
Auxiliary voltage outputs 10
Power and status LEDs 11
Using the UPS expansion board 12
UPS and battery charger 12
Auxiliary voltage output 12
Advanced usage 13
RP2040 I²C bus addresses 13
I²C Configuration and control registers 14
Block diagram 16
Technical specifications 17
Dimensions 19
Disposal 20
Installation and use restrictions 20
Standards and regulations 20
Safety instructions 20
Set-up 20
Conformity Information 21
EU 21
USA 21
CANADA 22
RCM AUSTRALIA / NEW ZEALAND 22

Before opening the Strato Pi Max enclosure, disconnect all power sources and any connection to external devices, including USB and Ethernet cables.

Follow all applicable electrical safety standards, guidelines, specifications and regulations for installation, wiring and operations of Strato Pi Max.

Carefully and fully read this Strato Pi Max user guide before installation.

Strato Pi Max is not authorised for use in safety-critical applications where a failure of the product would reasonably be expected to cause personal injury or death. Safety-critical applications include, without limitation, life support devices and systems, equipment or systems for the operation of nuclear facilities and weapons systems. Strato Pi Max is neither designed nor intended for use in critical military or aerospace applications or environments and for automotive applications or environment. Customer acknowledges and agrees that any such use of Strato Pi Max is solely at Customer's risk, and that Customer is solely responsible for compliance with all legal and regulatory requirements in connection with such use.

Sfera Labs S.r.l. may make changes to specifications and product descriptions at any time, without notice. The product information on the web site or materials is subject to change without notice.

Please download and read the Sfera Labs Terms and Conditions document available at:

http://www.sferalabs.cc

Strato and Sfera Labs are trademarks of Sfera Labs S.r.l. Other brands and names may be claimed as the property of others.

Copyright © 2024 Sfera Labs S.r.l. All rights reserved.

Safety information

Carefully and fully read this user guide before installation and retain it for future reference.

Qualified personnel

The product described in this manual must be operated only by personnel qualified for the specific task and installation environment, in accordance with all relevant documentation and safety instructions. A qualified person should be capable of fully identifying all installation and operation risks and avoid potential hazards when working with this product.

Hazard levels

This manual contains information you must observe to ensure your personal safety and prevent damage to property. Safety information in this manual are highlighted by the safety symbols below, graded according to the degree of danger.

DANGER

Indicates a hazardous situation which, if not avoided, **will** result in death or serious personal injury.

WARNING

Indicates a hazardous situation which, if not avoided, **may** result in death or serious personal injury.

CAUTION

Indicates a hazardous situation which, if not avoided, can result in minor or moderate personal injury.

NOTICE

Indicates a situation which, if not avoided, can result in damage of property.

Safety instructions

General safety instructions

Protect the unit against moisture, dirt and any kind of damage during transport, storage and operation. Do not operate the unit outside the specified technical data.

Never open the housing. If not otherwise specified, install in closed housing (e.g. distribution cabinet). Earth the unit at the terminals provided, if existing, for this purpose. Do not obstruct cooling of the unit. Keep out of the reach of children.

WARNING

Life threatening voltages are present within and around an open control cabinet.

When installing this product in a control cabinet or any other areas where dangerous voltages are present, always switch off the power supply to the cabinet or equipment.

WARNING

Risk of fire if not installed and operated properly.

Follow all applicable electrical safety standards, guidelines, specifications and regulations for installation, wiring and operations of this product.

The expansion board could generate a substantial amount oh heat, particularly when subject to a significant amount of electrical load.

NOTICE

The connection of expansion devices to this product may damage the product and other connected systems, and may violate safety rules and regulations regarding radio interference and electromagnetic compatibility.

Use only appropriate tools when installing this product. Using excessive force with tools may damage the product, alter its characteristics or degrade its safety.

Introduction

The X2-Series X2BP10XPB Uninterruptible Power Supply (UPS) expansion board provides an integrated battery backup power supply to the Strato Pi Max XL and Strato Pi Max XS servers.

The board is connected to an external lead acid or AGM battery, that is charged by the board itself.

This manual generally refers to Strato Pi Max XL and Strato Pi Max XS as Strato Pi Max.

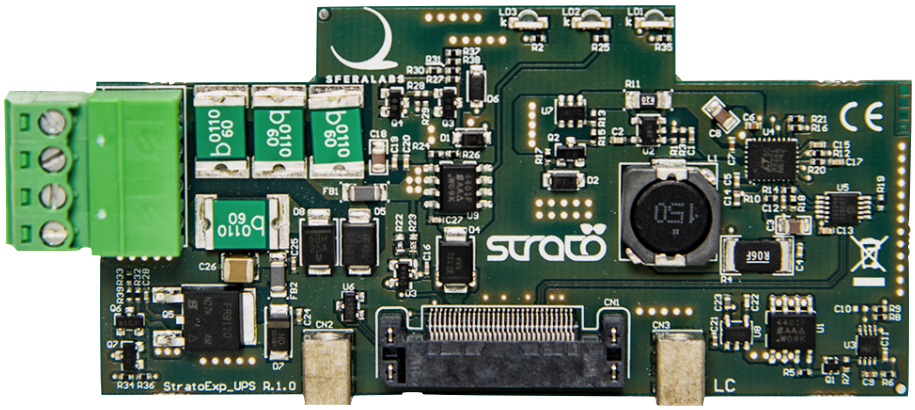

X2BP10XPB UNINTERRUPTIBLE POWER SUPPLY X2-SERIES EXPANSION BOARD

Features

- ✓ integrated uninterruptible power supply (UPS), with external lead-acid 12V or 24V battery (with reverse polarity, surge and over-current protection)
- ✓ supports external 12 V or 24 V lead acid or AGM batteries. Suggested capacity: 1.2 Ah to 7 Ah
- ✓ battery input surge and 3.3A resettable fuse protection
- ✓ the internal battery charger is controlled by the RP2040 microcontroller, and could be reconfigured to support other battery chemistries or charge/discharge profiles
- ✓ battery voltage and current monitor
- ✓ software controlled auxiliary supply output (VSO), to power external devices. Up to 1.1 A maximum output current
- ✓ front panel LEDs show battery charger status, power failure, and auxiliary output power.

Device identification

The circuit board is identified by the "**StratoExp_UPS R.1.0**" markings on the lower left corner of the circuit board (front view). One or more alphanumeric characters may be printed after the version number.

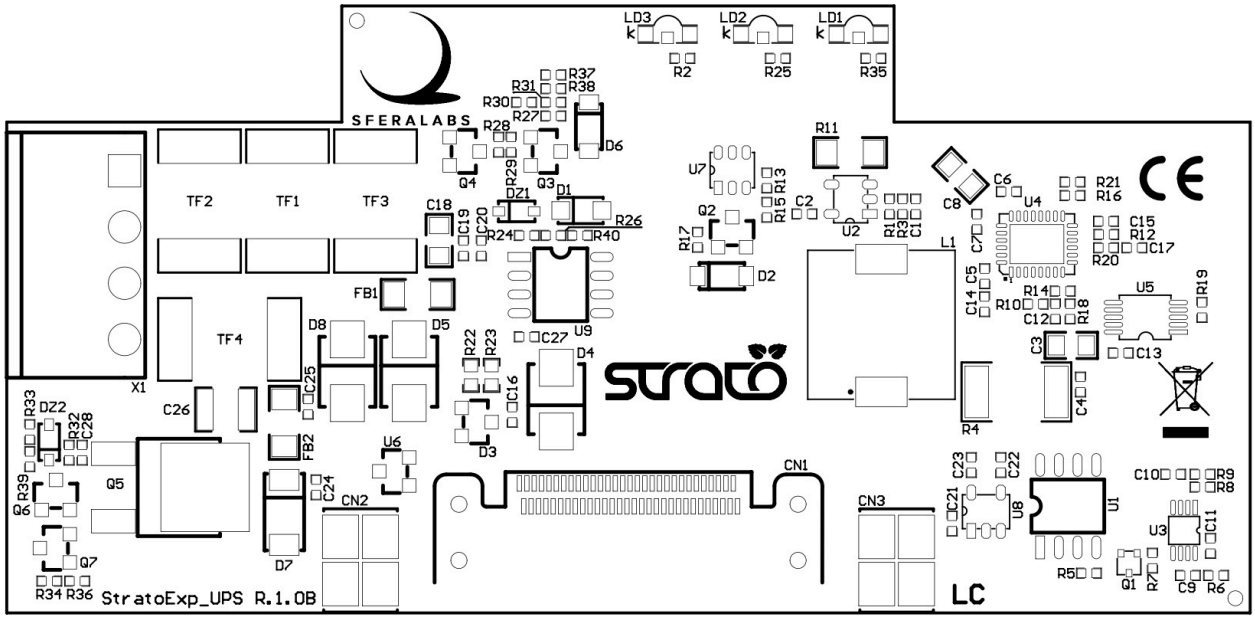

CIRCUIT BOARD IDENTIFICATION MARKINGS

Hardware setup

Connections

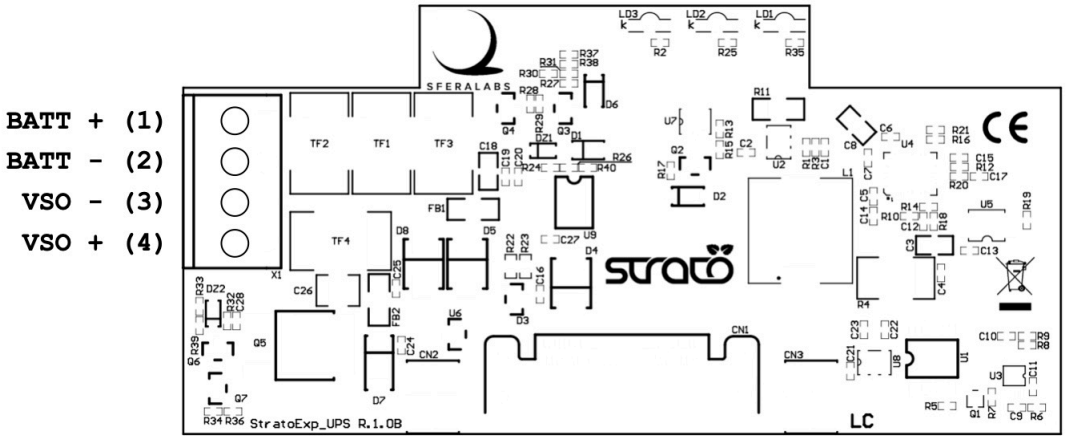

TERMINAL BLOCK CONNECTIONS

In order to install or remove the expansion board, the plastic DIN rail enclosure must be removed

NOTICE

Before opening the Strato Pi Max enclosure, disconnect all power sources and any connection to external devices, including USB and Ethernet cables.

Follow the Strato Pi Max User Guide installation instructions.

This expansion board must be installed in slot 1.

Carefully align the board-to-board connectors and gently push the board in place. Note that the connectors could be damaged if not properly aligned during insertion or removal.

Use the two screws provided with the expansion board to lock the board in place.

The external UPS battery

The UPS expansion board requires an external lead acid rechargeable battery connected to the BATT terminals. See the connection diagram above.

WARNING

Improper handling of lead acid batteries can result in an explosion of the batteries and/or release of harmful substances.

Worn-out or defective batteries can compromise the function of this product.

Replace the battery every 5 years even if the battery is still working properly.

Only use a lead acid battery with electrical ratings recommended in the technical specifications for this product (12V or 24V, 7Ah max).

Dispose of used batteries according to local regulations and the battery manufacturer's instructions.

Follow the battery manufacturer's instructions when installing the external UPS battery (not provided).

Battery charger

The UPS expansion board implements a programmable battery charger, that can charge an external lead-acid or AGM battery (other chemistries could be supported with future firmware releases).

The battery line is protected by an internal 3.3 A resettable fuse.

You can use either 12 V or 24 V batteries. The supported maximum battery capacity is 60 Ah, but the battery charger can deliver no more than approximately 600 mA charging current, so charging time for large batteries could be very long.

For low load applications, a 12 V 1.2 Ah battery is sufficient to keep Strato Pi Max running for several minutes and perform an orderly shutdown. A 12 V or 24 V 7 Ah battery is recommended for high load applications.

The factory default configuration for the battery charger has the charger enabled and configured for a 12 V battery with 800mAh capacity.

WARNING

Ensure that the charger parameters are correctly configured before connecting the battery to the battery terminals.

Auxiliary voltage outputs

The UPS expansion board has an auxiliary voltage output, labeled VSO in the connection diagram above and is powered by the UPS. It can deliver up to 1 A, and its output is protected by a 1.1 A resettable fuse.

The output voltage is slightly lower than the main power supply voltage, or the battery voltage when the main supply not present and Strato Pi Max is running from battery.

In the factory default configuration, the VSO output is enabled and can be controlled by the user.

Power and status LEDs

The UPS expansion board has three LEDs, visible through the front panel:

A. Blue: on when the auxiliary voltage output is active

B. Yellow: on when Strato Pi Max power is supplied by the battery (main supply not present)

C. Red: on when the external UPS battery is being charged (main supply present).

Using the UPS expansion board

UPS and battery charger

When an external rechargeable battery is connected to the UPS expansion board battery terminals, the Compute Module and all Strato Pi Max features will remain powered when the main power supply fails, as long as there is enough energy in the battery.

When power is available, the external rechargeable battery is charged with a current that depends on the battery voltage and capacity, as configured, or kept fully charged with a minimal floating current.

Battery operations status is visually notified with the yellow LED (B) and can be checked reading the I²C control registers or the corresponding sysfs files.

Starting from a power off condition, Strato Pi Max will not power-up if only the back-up battery is connected.

Battery voltage and charge current can be monitored. Note that, when Strato Pi Max is being powered by the UPS battery, the reported voltage continues to show the battery voltage, while the current value drops close to zero.

Auxiliary voltage output

An auxiliary voltage output, labeled VSO, is available on the terminal block. It can be enabled/disabled by the user, and is powered by the UPS.

In the factory default configuration, VSO is enabled.

Advanced usage

RP2040 I²C bus addresses

The following table lists the components added by this expansion board to the RP2040 I²C bus, and their R/W addresses.

P/N	ID	ADDR	WRITE	READ
MCP4652T-104E		0x2C [0101100]	0x58	0x59

I²C Configuration and control registers

Installing a UPS Expansion Board on Strato Pi Max adds the I²C configuration and control registers described below.

Refer to the Strato Pi Max User Guide for details on registers access and configuration parameters usage.

ADDR	BYTE 1								BYTE 0							
	15	14	13	12	11	10	9	8	7	6	5	4	3	2	1	0
100							VSO CFG	VSO						VOLT CFG	EN CFG	EN
101	CAPACITY CFG															
102	MAX CURRENT															
103	MAX CURRENT CFG															
104	DOWN DELAY CFG															
106									BAT				UPS STAT			
107	BAT V															
108	BAT I															

Register 100 [R][W]

Bit 0 **EN**: UPS control

0 = disabled (default)

1 = enabled

Bit 1 **EN CFG** [D]: power-up value for **EN**

Bit 2 **VOLT CFG** [C]: battery voltage configuration

0 = 12 V (default)

1 = 24 V

Bit 7-3 reserved

Bit 8 **VSO**: VSO power output control

0 = disabled

1 = enabled (default)

Bit 9 **VSO CFG** [D]: power-up value for **VSO**

Bit 15-10 reserved

Register 101 [R][W][C]

Bit 15-0 **CAPACITY CFG**: capacity of the battery connected to the UPS, in mAh.

Default = 800. Accepts values between 100 and 60000 (60Ah)

Register 102 [R][W]

Bit 15-0 **MAX CURRENT**: battery maximum charging current while at maximum voltage

0 = automatically derived from capacity (default)

N > 0 = limit current below the specified value, in mA. The automatically derived limit still applies if lower than the set value

Register 103 [R][W][D]

Bit 15-0 **MAX CURRENT CFG**: power-up value for **MAX CURRENT**

Register 104 [R][W][C]

Bit 15-0 **DOWN DELAY CFG**: automatic power cycle timeout configuration

0 = automatic power cycle disabled (default)

N > 0 = if the main power source is not available for the time set, in seconds, a delayed power cycle is automatically initiated

Register 106 [R]

Bit 3-0 **UPS STAT**: UPS status

0 = idle

1 = detecting battery

2 = battery disconnected

4 = charging battery

5 = battery charged

6 = battery powered

8 = battery over-voltage error

9 = battery under-voltage error

10 = charger damaged

11 = unstable

Bit 6-4 reserved

Bit 7 **BAT**: battery/main power

0 = running on main power

1 = running on battery power

Bit 15-8 reserved

Register 107 [R]

Bit 15-0 **BAT V**: voltage measured on battery charger output, in mV

Register 108 [R]

Bit 15-0 **BAT I**: current drain measured on battery charger output, in mA

Block diagram

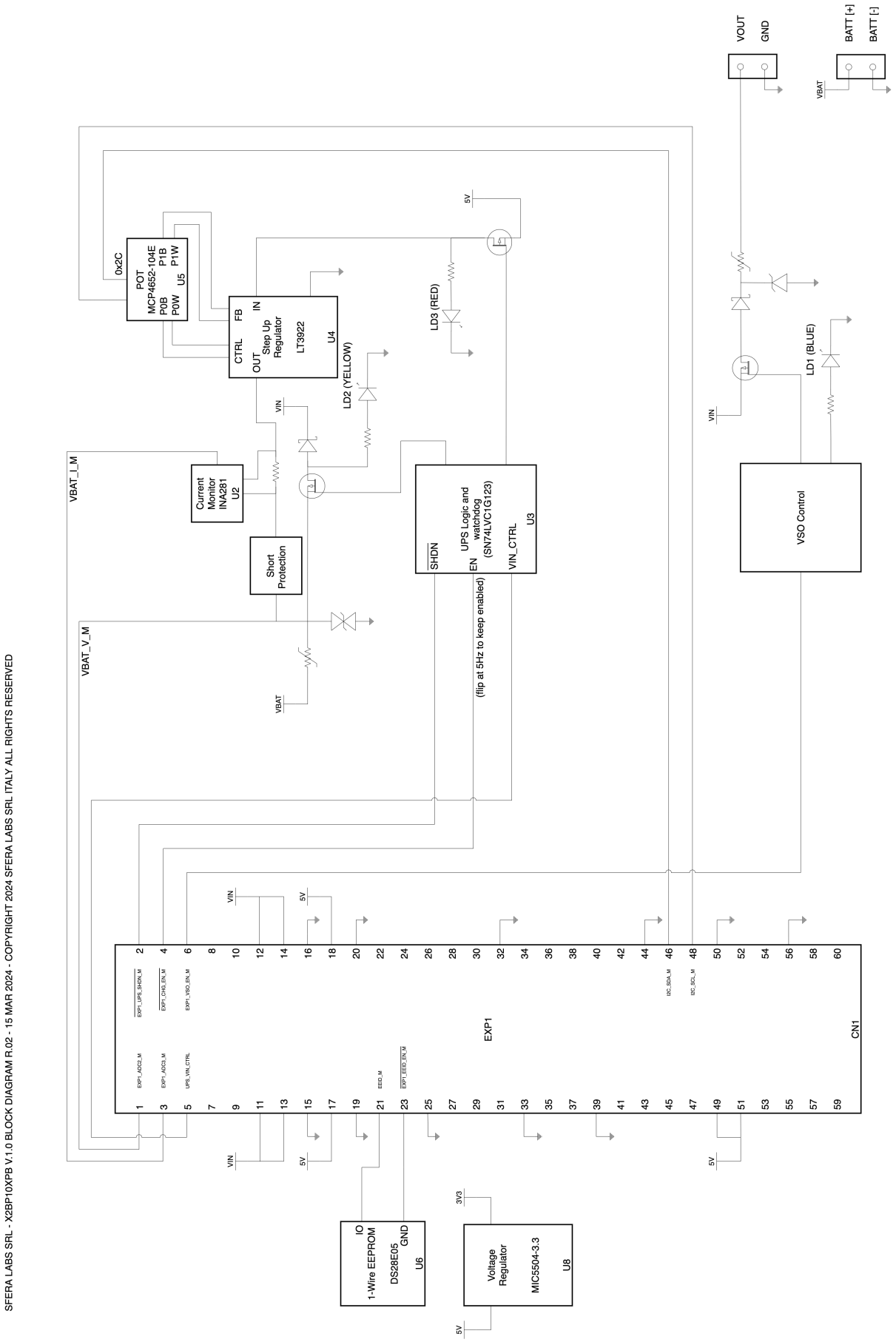

SFERA LABS SRL - X2BP10XPB V.1.0 BLOCK DIAGRAM R.02 - 15 MAR 2024 - COPYRIGHT 2024 SFERA LABS SRL ITALY ALL RIGHTS RESERVED

Technical specifications

Note: all values typical, at +25 °C and under normal operating conditions.

POWER SUPPLY	
UPS external battery (not included)	12 V or 24 V lead acid or AGM battery. Suggested capacity: 1.2 Ah to 7 Ah. Reverse polarity and surge protection with 3.3 A resettable fuse
UPS battery charge voltage	28.5 V (Max. for 24V batteries)
UPS battery charge current	500 mA (Max. for 12V batteries)
Voltage threshold for switching to battery mode	7.5 V
VSO output voltage drop compared to power supply or battery	2 V (0.75 A load)
VSO output power	1 A (Max)
VSO output resettable fuse	1.1 A
BATTERY VOLTAGE SENSOR	
Voltage range	0…45 V
Total Unadjusted Error (TUE)	±2.5 % of full-scale
Resolution	12 bits (8.7 RP2040 ENOB)
BATTERY CURRENT SENSORS	
Current range	0…1.5 A
Total Unadjusted Error (TUE)	±2.5 % of full-scale
Resolution	12 bits (8.7 RP2040 ENOB)
EMI IMMUNITY STANDARDS	
Electromagnetic immunity compliance	EN 61000-4-2 (ESD) EN 61000-4-3 (Radiated RF Field) EN 61000-4-4 (Burst/fast transient) EN 61000-4-5 (Surge) EN 61000-4-6 (Conducted) EN 61000-4-8 (Power frequency magnetic field)
ENVIRONMENTAL	
Operating temperature	-20…+60 °C
Storage temperature	-30…+80 °C
Altitude	Up to 2000 m
Humidity	5% to 95% RH noncondensing
Protection degree	IP20

Vibration IEC 60068-2-6 (Test Fc, Operating)	0.7 g @ 5…100 Hz
MECHANICAL	
3.81 mm pitch terminal block characteristics	Maximum conductor cross section: 1.3 mm2 (16AWG), or 0.5 mm2 when using ferrules (highly recommended) Recommended stripping length: 6 mm Screw thread: M2 Maximum screws tightening torque: 0.3 Nm
Dimensions	width: 84.3 mm height: 41.1 mm depth: 10.5 mm
Weight	25 g (including terminal block and screws)

Dimensions

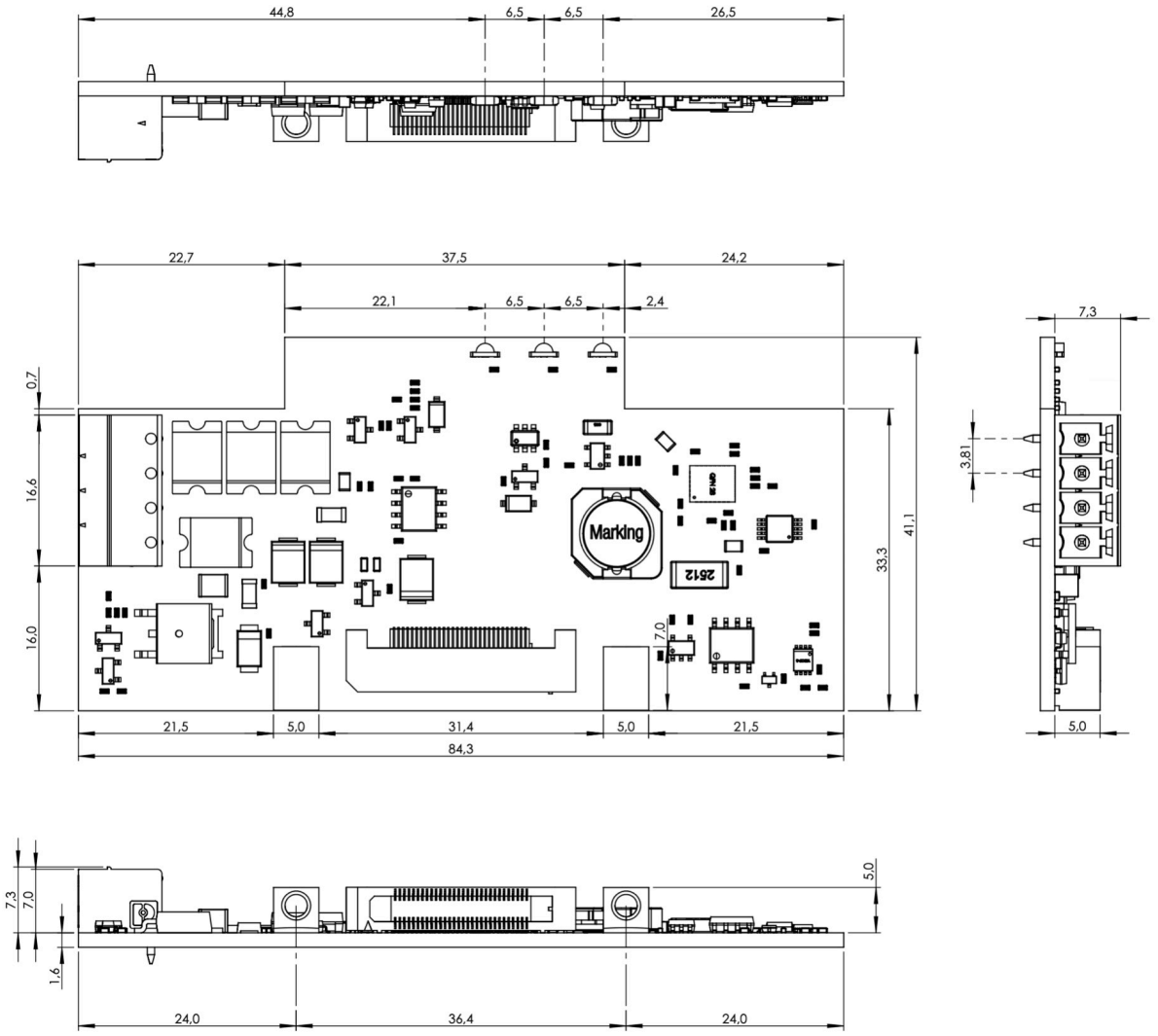

DIMENSIONS (mm)

Disposal

Waste Electrical & Electronic Equipment

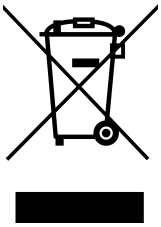

(Applicable in the European Union and other European countries with separate collection systems). This marking on the product, accessories or literature indicates that the product should not be disposed of with other household waste at the end of their working life. To prevent possible harm to the environment or human health from uncontrolled waste disposal, separate these items from other types of waste and recycle them responsibly to promote the sustainable reuse of material resources. Household users should contact either the retailer where they purchased this product, or their local government office, for details of where and how they can take these items for environmentally safe recycling. This product and its electronic accessories should not be mixed with other commercial wastes for disposal.

Strato Pi Max contains a small non rechargeable manganese dioxide lithium coin battery.

In the Strato Pi Max, the battery is not accessible from the outside. You should first remove the case body to gain access to the Strato Pi Max circuit boards. Always remove the battery before disposing of this product.

Installation and use restrictions

Standards and regulations

The design and the setting up of electrical systems must be performed according to the relevant standards, guidelines, specifications and regulations of the relevant country. The installation, configuration and programming of the devices must be carried out by trained personnel.

The installation and wiring of connected devices must be performed according to the recommendations of the manufacturers (reported on the specific data sheet of the product) and according to the applicable standards.

All the relevant safety regulations, e.g. accident prevention regulations, law on technical work equipment, must also be observed.

Safety instructions

Carefully read the safety information section at the beginning of this document.

Set-up

For the first installation of the device proceed according to the following procedure:

- ✓ make sure all power supplies are disconnected
- ✓ install and wire the device according to the schematic diagrams on the specific product user guide
- ✓ after completing the previous steps, switch on the power supply and other related circuits.

Conformity Information

EU

This device complies with the following applicable European Community harmonised standards:

- ✓ 2014/30/EU - Electromagnetic Compatibility Directive (EMC)
- ✓ 2011/65/EU and 2015/863/EU - Restriction of the use of certain hazardous substances in electrical and electronic equipment (RoHS 3)

The following harmonised standards have been used to demonstrate conformity to these directives:

- ✓ EN61000-6-2: 2019 - EMC Immunity standard for industrial environments
- ✓ EN 61000-6-3: 2021 - EMC Emission standard for residential, commercial and light-industrial environments

The declaration of conformity is available at: https://www.sferalabs.cc

USA

This equipment has been tested and found to comply with the limits for a Class B digital device, pursuant to part 15 of the FCC Rules. These limits are designed to provide reasonable protection against harmful interference in a residential installation. This equipment generates, uses and can radiate radio frequency energy and, if not installed and used in accordance with the instructions, may cause harmful interference to radio communications. However, there is no guarantee that interference will not occur in a particular installation. If this equipment does cause harmful interference to radio or television reception, which can be determined by turning the equipment off and on, the user is encouraged to try to correct the interference by one or more of the following measures:

- Reorient or relocate the receiving antenna
- Increase the separation between the equipment and receiver
- Connect the equipment into an outlet on a circuit different from that to which the receiver is connected
- Consult the dealer or an experienced radio/TV technician for help.

Shielded cables must be used with this equipment to maintain compliance with FCC regulations.

This device complies with Part 15 of the FCC Rules. Operation is subject to the following two conditions: (1) this device may not cause harmful interference, and (2) this device must accept any interference received, including interference that may cause undesired operation.

CANADA

This Class B digital apparatus complies with Canadian ICES-003.

Cet appareil numérique de la classe B est conforme à la norme NMB-003 du Canada.

RCM AUSTRALIA / NEW ZEALAND

This product meets the requirements of the standard EN 61000-6-3: 2021 - Emission for residential, commercial and light-industrial environments.