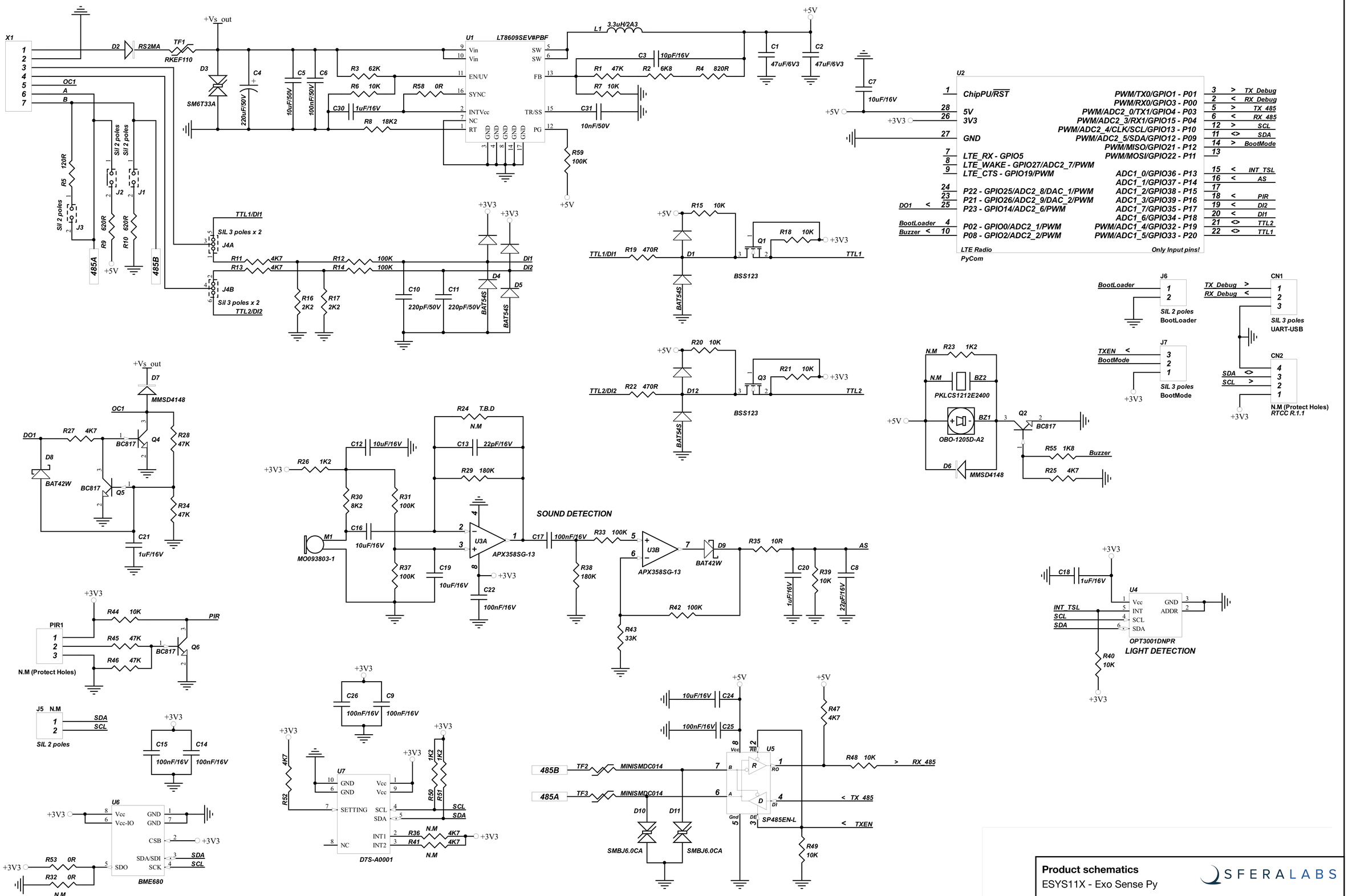

Product schematics

ESYS11X - Exo Sense Py

SFERALABS

© 2019 Sfera Labs S.r.l.