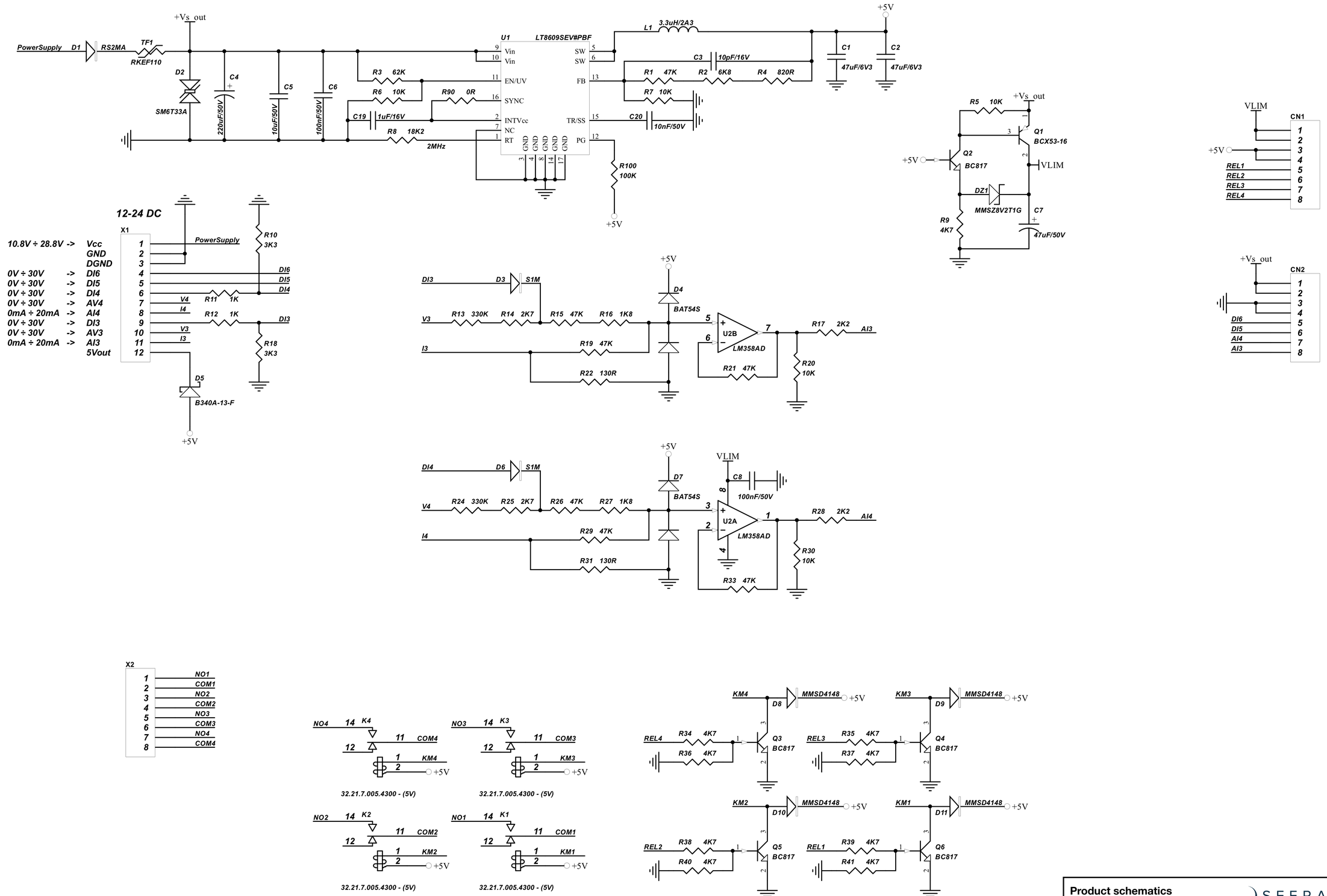

Product schematics
IMMS13X - Iono MKR
(Base)

SFERALABS

© 2018 Sfera Labs S.r.l.

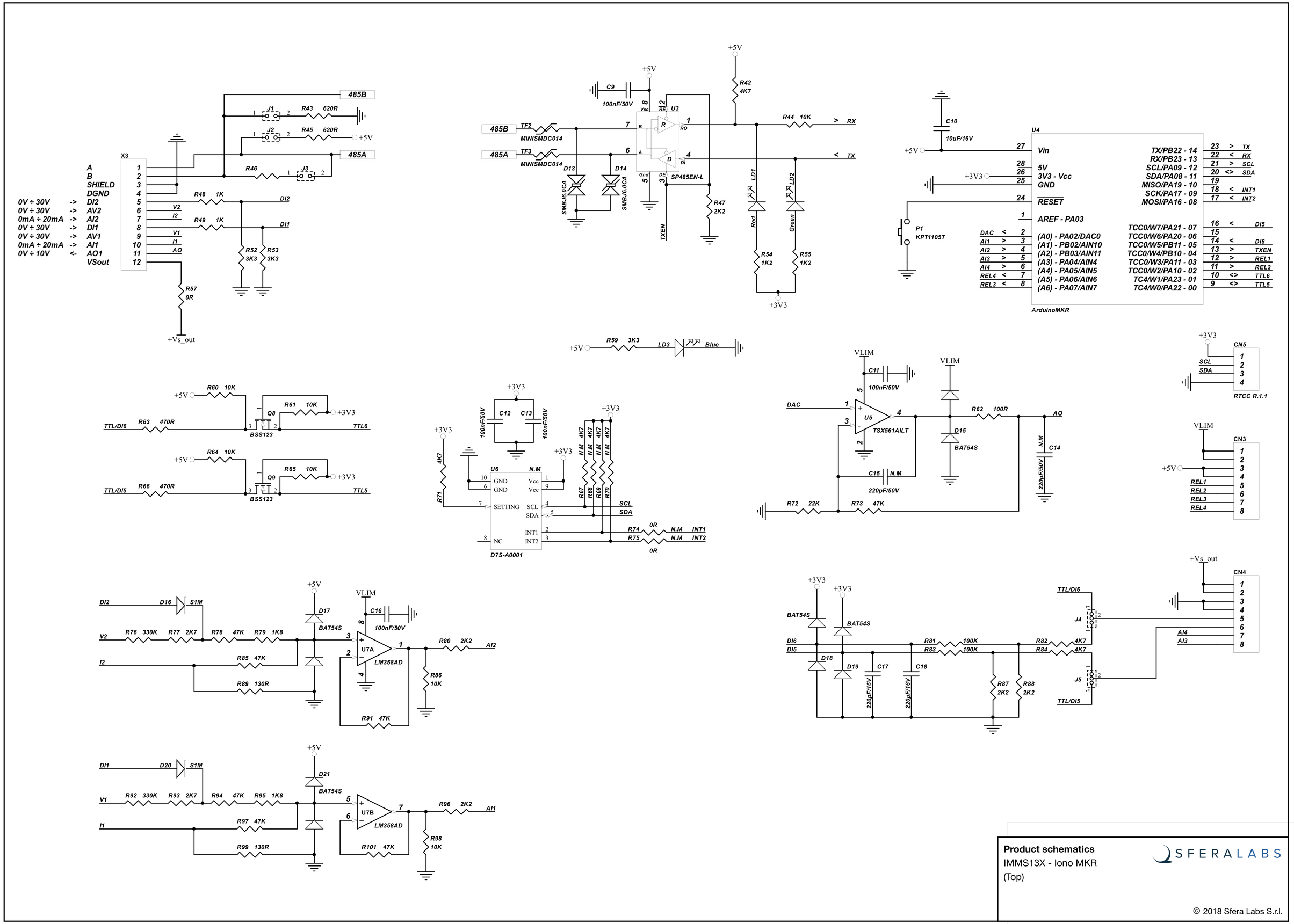

Product schematics
IMMS13X - Iono MKR
(Top)

SFERALABS

© 2018 Sfera Labs S.r.l.