Iono MKR User Guide

November 2023

Revision 007

IMMS13X *Iono MKR*

IMMS13R *Iono MKR with RTC*

IMMS13S *Iono MKR with RTC and Secure Element*

A general-purpose, professional input/output module based on Arduino MKR boards

SFERALABS

Safety information 4
Qualified personnel 4
Hazard levels 4
Safety instructions 5
General safety instructions 5
Battery 5
Introduction 7
Features 8
Usage and connections 9
Device identification 10
Power supply 10
Multi-mode inputs 10
Analog mode 10
Digital mode 10
DI5 and DI6 digital inputs 11
Analog output 12
Relay digital outputs 12
RS-485 serial port 12
Mapping 14
Hardware Installation 15
Opening the case 15
Closing the case 15
Arduino MKR board installation 16
Iono MKR software development 17
Programming 17
Optional components 18
Real Time Clock module 18
Replacing the RTC backup battery 18
ATECC608 secure element 19
Earthquake sensor module 20
Block diagram 21
Board layout 22
Technical specifications 23
Dimensions 26
Disposal 27
Installation and use restrictions 27

Standards and regulations 27
Safety instructions 27
Set-up 27
Conformity Information 28
EU 28
USA 28
CANADA 29
RCM AUSTRALIA / NEW ZEALAND 29

Be sure to always remove the power supply before installing or removing the Arduino board inside Iono MKR.

Iono MKR must be operated with the plastic case installed.

Follow all applicable electrical safety standards, guidelines, specifications and regulations for installation, wiring and operations of Iono MKR modules.

Carefully and fully read this Iono MKR user guide before installation.

Iono MKR is not authorised for use in safety-critical applications where a failure of the product would reasonably be expected to cause personal injury or death. Safety-critical applications include, without limitation, life support devices and systems, equipment or systems for the operation of nuclear facilities and weapons systems. Iono MKR is neither designed nor intended for use in military or aerospace applications or environments and for automotive applications or environment. Customer acknowledges and agrees that any such use of Iono MKR is solely at Customer's risk, and that Customer is solely responsible for compliance with all legal and regulatory requirements in connection with such use.

Sfera Labs S.r.l. may make changes to specifications and product descriptions at any time, without notice. The product information on the web site or materials is subject to change without notice.

Please download and read the Sfera Labs Terms and Conditions document available at:

http://www.sferalabs.cc

Iono and Sfera Labs are trademarks of Sfera Labs S.r.l. Other brands and names may be claimed as the property of others.

Copyright © 2018-2021 Sfera Labs S.r.l. All rights reserved.

Safety information

Carefully and fully read this user guide before installation and retain it for future reference.

Qualified personnel

The product described in this manual must be operated only by personnel qualified for the specific task and installation environment, in accordance with all relevant documentation and safety instructions. A qualified person should be capable of fully identifying all installation and operation risks and avoid potential hazards when working with this product.

Hazard levels

This manual contains information you must observe to ensure your personal safety and prevent damage to property. Safety information in this manual are highlighted by the safety symbols below, graded according to the degree of danger.

DANGER

Indicates a hazardous situation which, if not avoided, **will** result in death or serious personal injury.

WARNING

Indicates a hazardous situation which, if not avoided, **may** result in death or serious personal injury.

CAUTION

Indicates a hazardous situation which, if not avoided, can result in minor or moderate personal injury.

NOTICE

Indicates a situation which, if not avoided, can result in damage of property.

Safety instructions

General safety instructions

Protect the unit against moisture, dirt and any kind of damage during transport, storage and operation. Do not operate the unit outside the specified technical data.

Never open the housing. If not otherwise specified, install in closed housing (e.g. distribution cabinet). Earth the unit at the terminals provided, if existing, for this purpose. Do not obstruct cooling of the unit. Keep out of the reach of children.

WARNING

Life threatening voltages are present within and around an open control cabinet.

When installing this product in a control cabinet or any other areas where dangerous voltages are present, always switch off the power supply to the cabinet or equipment.

WARNING

Risk of fire if not installed and operated properly.

Follow all applicable electrical safety standards, guidelines, specifications and regulations for installation, wiring and operations of this product.

Ensure that the product is properly installed and ventilated to prevent overheat.

NOTICE

The connection of expansion devices to this product may damage the product and other connected systems, and may violate safety rules and regulations regarding radio interference and electromagnetic compatibility.

Use only appropriate tools when installing this product. Using excessive force with tools may damage the product, alter its characteristics or degrade its safety.

Battery

This product optionally uses a small lithium non-rechargeable battery to power its internal real time clock (RTC).

WARNING

Improper handling of lithium batteries can result in an explosion of the batteries and/or release of harmful substances.

Worn-out or defective batteries can compromise the function of this product.

Replace the RTC lithium battery before it is completely discharged. The lithium battery must be replaced only with an identical battery. See the "Replacing the RTC backup battery" section for instructions.

Do not throw lithium batteries into fire, do not solder on the cell body, do not recharge, do not open, do not short-circuit, do not reverse polarity, do not heat above 100°C and protect from direct sunlight, moisture and condensation.

Dispose of used batteries according to local regulations and the battery manufacturer's instructions.

Introduction

Iono MKR combines the ease of use of the Arduino platform with multiple input and output interfaces; the result is a rugged, safe, reliable and easy to connect module, suited for installation both in industrial and residential environments.

Iono MKR ships without any Arduino board, so you can use your preferred Arduino MKR board, as far as it is fully compatible with the Arduino MKR pinout and fits the Iono MKR case.

Features

The Iono MKR key features are:

- ✓ 12÷28Vdc power supply, with surge and reverse polarity protection, and 1.1A resettable fuse
- ✓ compatible with 3.3V operating voltage Arduino MKR boards. Currently the following boards are supported: Arduino MKR WiFi 1010, Arduino MKR1000 WiFi (with headers), Arduino MKR ZERO, Arduino MKR GSM 1400, Arduino MKR FOX 1200, Arduino MKR WAN 1300
- ✓ 4 multi-mode inputs: either to be used as digital or as 0÷30V or 0÷20mA analog signals
- ✓ 2 digital inputs for potential-free contacts or TTL level input/output
- ✓ 1 buffered analog output 0÷10V controlled by the Arduino MKR DAC output
- ✓ 4 power relay outputs rated for 6A at 250V
- ✓ standard RS-485 interface to the Arduino serial pins, with electrostatic discharge protection
- ✓ 1-Wire, I2C and Wiegand support
- ✓ optional real time clock with on-board Lithium / Manganese Dioxide back-up battery
- ✓ optional secure element chip
- ✓ optional earthquake sensor module
- ✓ removable terminal blocks for easier installation
- ✓ inputs protected against electrostatic discharges and temporary over voltages
- ✓ compact, standard modular housing 3 units size, suitable for mounting on Omega rail.

Usage and connections

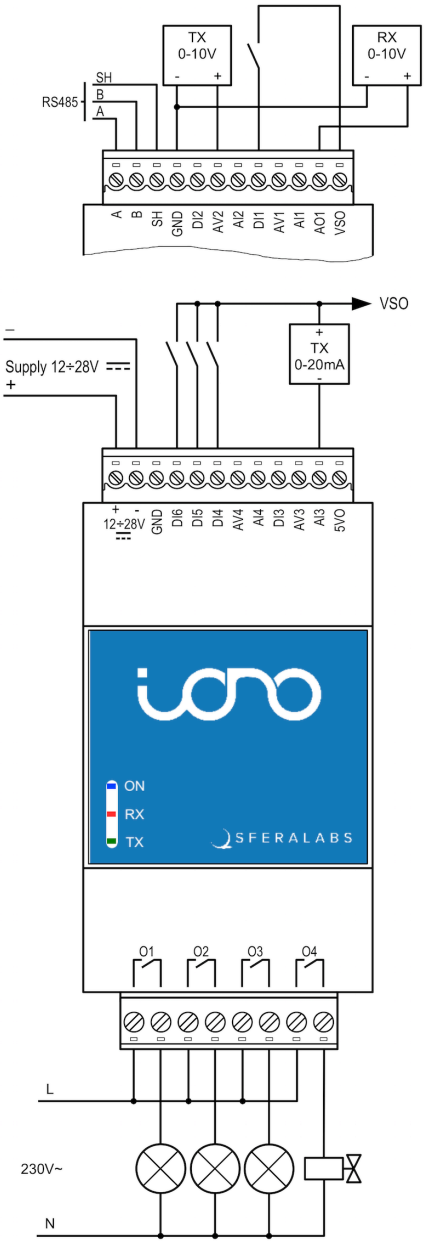

CONNECTION EXAMPLE

Device identification

The device can be identified with the information provided in the rating and identification plate, permanently attached to the side of the case.

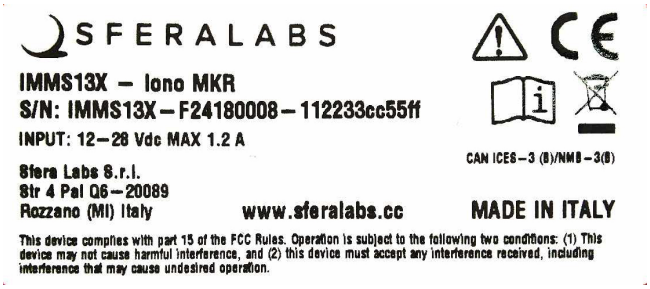

EXAMPLE RATING AND IDENTIFICATION PLATE

Power supply

Iono MKR can be powered with DC voltage only:

✓ DC: nominal voltage in the range 12V to 28V (min=11V, max=30V)

Respect the correct polarity shown in the schematic diagram (+ -). The power supply circuit implements reverse polarity protection using an auto resetting fuse and surge protection up to ±500V/2ohms 1.2/50µs.

Multi-mode inputs

Iono MKR features 4 multi-mode inputs. Depending on terminal blocks wiring, digital (ON-OFF), voltage (0÷30V) or current (0÷25mA) signals can be applied.

Analog mode

When using analog inputs (AV1-4, AI1-4), 0÷30V and 0÷25mA are converted to 0÷3.3V levels in order to be compatible with the Arduino platform input pins. Both active and passive 0÷20mA (or 4÷20mA) transmitters can be connected, using the VSO terminal as power supply; the 0÷20mA transmitter shown in the connection example diagram above is a 2-wire passive type.

Note that, when using input 3 in digital mode (DI3), because of stray currents in the Arduino board, applying a voltage that exceeds approximately 7V will cause significant errors to the analog values read on inputs 1, 2 and 4.

Digital mode

In digital mode, an external potential free contact can be connected between terminals VSO and DI1-4; otherwise, the DIx terminal can be connected to an external voltage signal (in the range 0÷40V) referred to the GND of the Iono MKR module.

DI5 and DI6 digital inputs

An external potential free contact can be connected between terminals VSO and DIx (x=5, 6); otherwise, the DIx terminal can be connected to an external voltage signal (in the 9÷40V range) referred to the GND of the Iono MKR module.

DI5 and DI6 are connected to the Arduino board through a protection network. If you need to bypass the protection network to use DI5 and DI6 as general-purpose TTL-level (0-5V) input/output lines, or for 1-Wire or Wiegand support, you can move jumpers J4 (DI6) and J5 (DI5) to the BYP position.

NOTICE

Note that, with the jumpers in the BYP position, you should limit the voltage applied to DI5 or DI6 between +0V and +5V (TTL level). Exceeding this voltage range will result in damage to the Arduino board and Iono MKR.

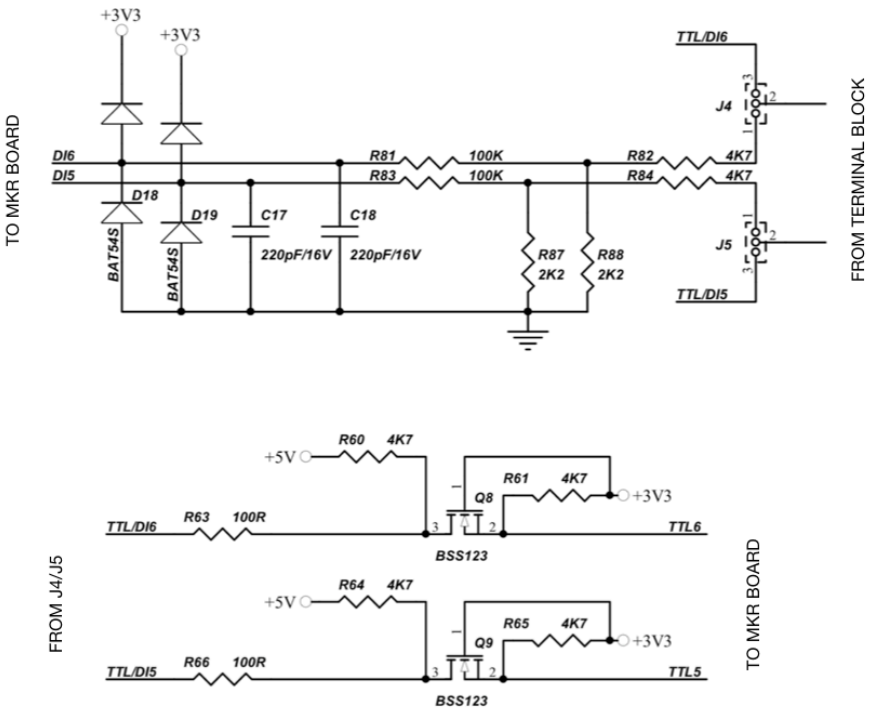

DI5-DI6 JUMPERS SCHEMATIC

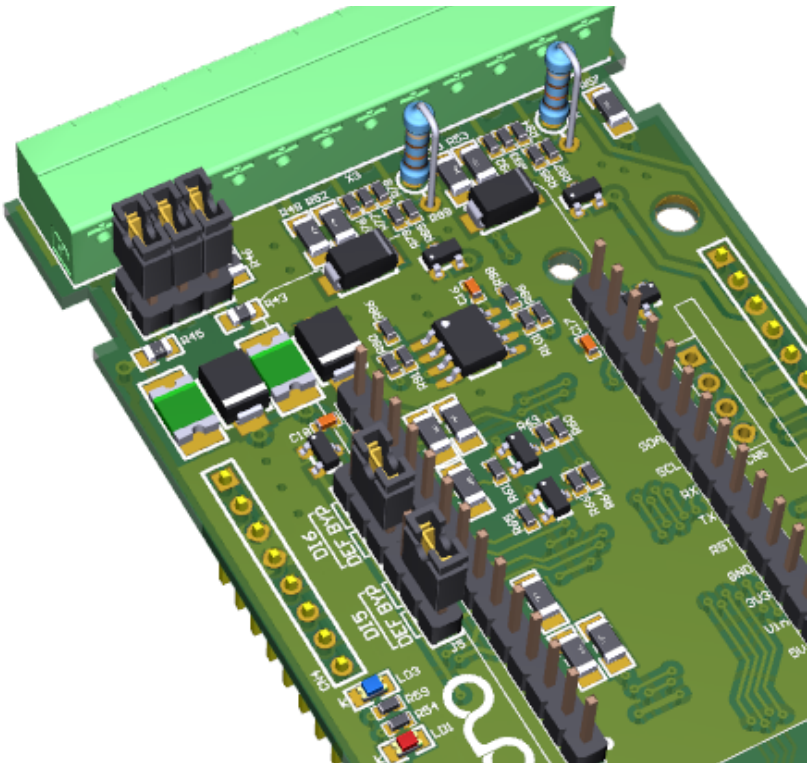

DI5-DI6 JUMPERS POSITION

Analog output

Iono MKR features a 0÷10V output (AO1) which can be controlled by the DAC0 pin of the Arduino board; the 0÷3.3V range of the DAC0 pin is converted to a 0÷10V output voltage.

This is a sink/source output (the current direction at this output can be both positive and negative).

Relay digital outputs

Iono MKR has four single pole single throw power relays, with normally open contacts.

The relays are driven by distinct digital outputs of the Arduino board.

RS-485 serial port

Iono MKR uses the Arduino UART TX/RX pins to implement a standard RS-485 serial port.

Simply connect the RS-485 A, B and GND to the RS-485 pins of the terminal block.

The RS-485 port is protected from ESD and voltage surges, and supports half-duplex communication up to to 115200 bps.

The RS-485 TX/RX switching is controlled by a digital output pin of the Arduino board (pin 4). You should set pin 4 high to enable transmission on the RS-485, and set it low to allow reception of incoming data.

The RS-485 line has 620 Ohm pull-up and pull-down resistors on lines A and B. The biasing resistors ensure that, during idle periods the data lines are kept at a stable voltage level and prevent false triggering of receiver input. These resistors can be enabled installing jumpers J2 and J1 respectively.

A 120 Ohm termination resistor between A and B can be enabled installing jumper J3.

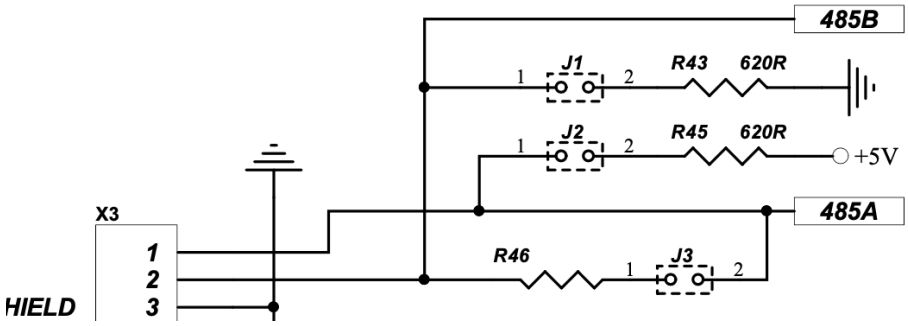

RS-485 JUMPERS SCHEMATIC

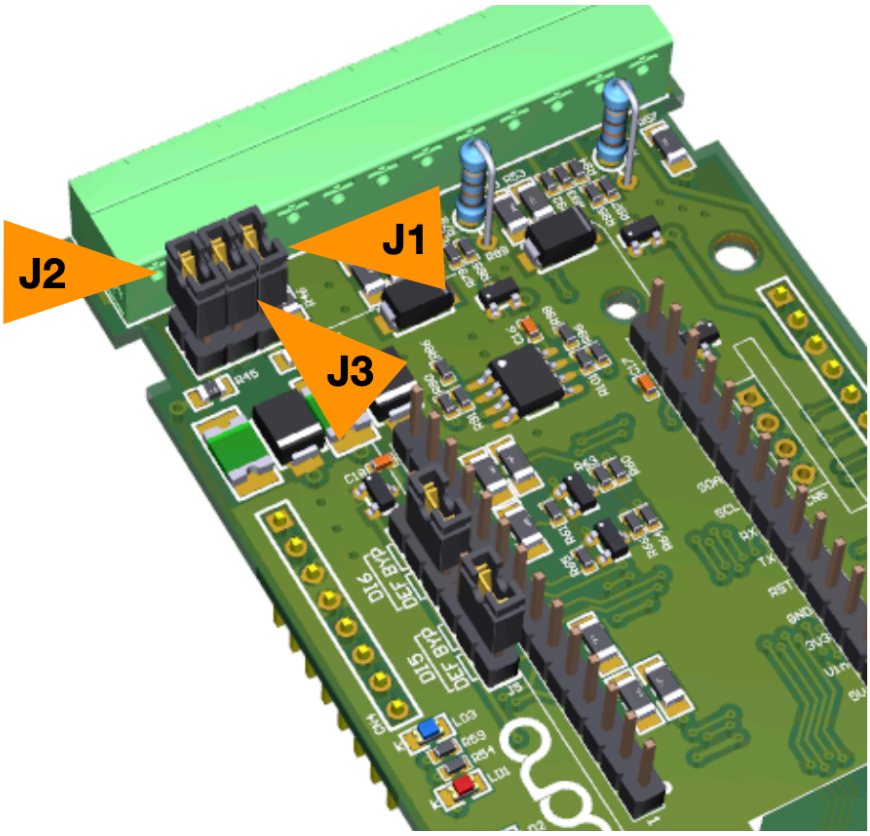

RS-485 JUMPERS POSITION

Mapping

The following table shows the mapping of the inputs and outputs of the Iono MKR module to the related pins of the Arduino platform.

Iono MKR inputs and outputs	Arduino pins
DI1 – AV1 – AI1	A1
DI2 – AV2 – AI2	A2
DI3 – AV3 – AI3	A3
DI4 – AV4 – AI4	A4
DI5	7 (DEF) - 0 (BYP)
DI6	5 (DEF) - 1 (BYP)
O1	3
O2	2
O3	A6
O4	A5
AO1	A0/DAC0
RS-485	RX (13) / TX (14)
RS-485 TX-ENABLE	4
I2C SDA for optional RTC and D7S	SDA (11)
I2C SCL for optional RTC and D7S	SCL (12)

Hardware Installation

For the initial set-up, the plastic DIN rail case must be removed to access the circuit boards and internal connectors.

The case also needs to be opened to connect a USB cable to the programming port of the Arduino board, and if the factory configuration of the internal jumpers for the RS-485 termination resistors or digital input configuration must be changed (see below).

NOTICE

Before opening the Iono MKR case, disconnect all power sources and any connection to external devices.

Opening the case

Follow these steps, in the exact order, to open the case:

1. Remove the green pluggable terminal blocks
2. Remove the black plastic DIN rail hook
3. With a small flat screwdriver gently separate the bottom case and boards assembly from the top cover
4. The circuit boards assembly will simply slide out of the case, as it is mechanically held in place by the bottom case only

Closing the case

5. Replace the circuit boards assembly inside the case; ensure that the terminal block connectors are aligned with the opening in the case
6. Replace the case bottom, then gently push the other side in place
7. Replace the black plastic DIN rail hook.

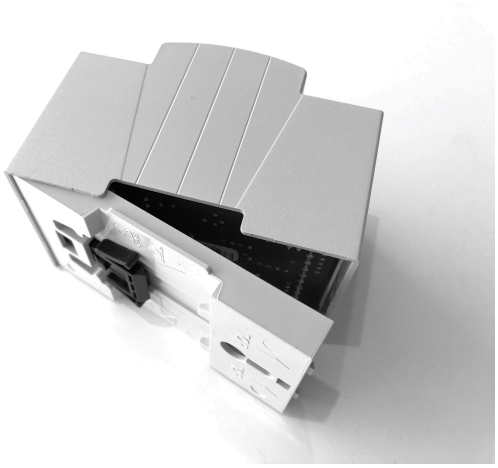

OPENING AND CLOSING THE CASE

Arduino MKR board installation

To install your own Arduino MKR board in Iono MKR, or replace a pre-installed board, no tools are required. The Arduino MKR board top side pin headers (female) connect to the pin headers (male) of the top Iono MKR board. The Arduino MKR board is installed upside down, with the micro USB programming near the relay outputs terminal block.

NOTICE

Static electricity can damage the components in your system. To protect your system's components from static damage during the installation process, touch any of the unpainted metal surfaces on your computer's frame or wear an ESD wrist strap before handling internal components. Either method will safely discharge static electricity that's naturally present in your body.

When handling the Arduino MKR, be sure to hold it along the side edges using your thumb and index finger. Avoid touching the components and pin connectors as damage can occur.

Iono MKR software development

Since Iono MKR is just a super-sized I/O shield for a standard Arduino MKR board, you don't need any specific library to work on it.

Our libraries and examples, available with source code on GitHub, will provide you with some handy utilities to speed up your development, including functionalities to monitor the inputs (filtering out possible noise) and control the outputs, HTTP APIs, Modbus support and much more.

Go to **https://github.com/sfera-labs** to access the code and documentation.

Programming

The Arduino MKR board, when mounted into a Iono MKR module, must be programmed through its micro USB port.

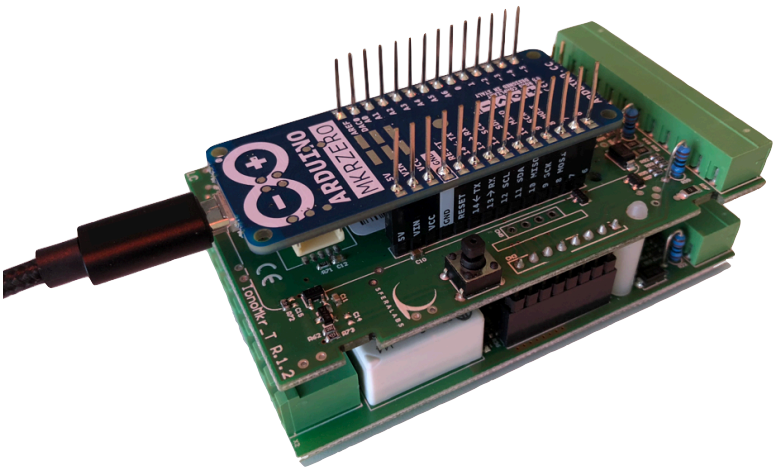

PROGRAMMING THE ARDUINO BOARD

Connect the adapter to a PC and perform the programming as usual. This operation does not require the Iono MKR module to be connected to a power supply.

Optional components

Real Time Clock module

Iono MKR can be shipped with an optional, factory-installed hardware real time clock with a dedicated long-life non-rechargeable back-up battery.

The battery is only used to power the RTC chip when the main power is not available. Depending on operating conditions it should last up to two years if the Iono MKR board is not powered, more if the Iono MKR receives external power.

The RTC module is based on the Microchip MCP79410 real-time clock/calendar chip. It is connected to the Arduino MKR via the I2C bus (address: 0x57 for the EEPROM and 0x6f for the SRAM/RTCC registers).

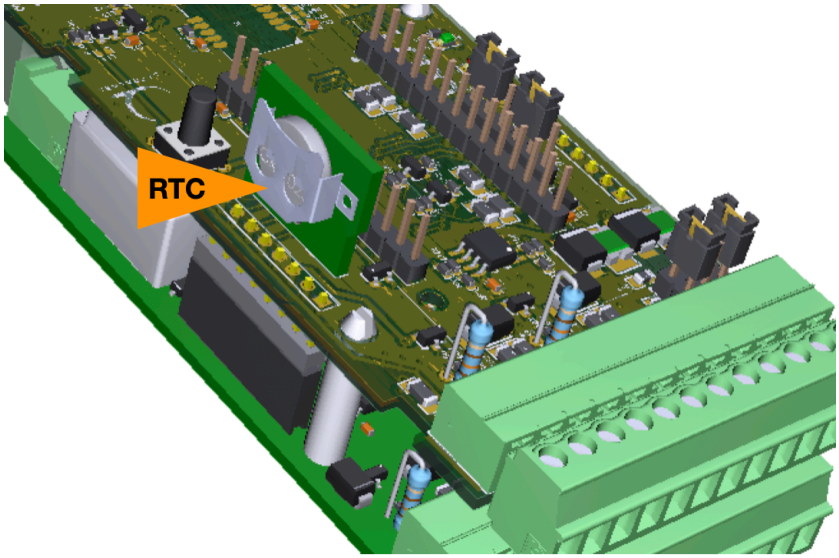

OPTIONAL REAL TIME CLOCK MODULE AND BATTERY

Replacing the RTC backup battery

The Iono MKR RTC module uses a **CR1025** Lithium / Manganese Dioxide (Li/MnO2) battery.

WARNING

Improper handling of lithium batteries can result in an explosion of the batteries and/or release of harmful substances.

Worn-out or defective batteries can compromise the function of this product.

KEEP OUT OF REACH OF CHILDREN. Swallowing may lead to serious injury or death in as little as 2 hours due to chemical burns and potential perforation of the esophagus. Immediately see doctor.

Replace the RTC lithium battery before it is completely discharged. Replace the battery every 5 years even if the battery is still working properly. The lithium battery must be replaced only with an identical **CR1025** Lithium / Manganese Dioxide (Li/MnO2) battery.

Do not throw lithium batteries into fire, do not solder on the cell body, do not recharge, do not open, do not short-circuit, do not reverse polarity, do not heat above 100°C and protect from direct sunlight, moisture and condensation.

Dispose of used batteries according to local regulations and the battery manufacturer's instructions.

The RTC backup battery holder is soldered to the bottom layer of the RTC module circuit board. The battery is not accessible from the outside. You should first remove the case top body to gain access to the Iono MKR circuit boards.

NOTICE

Before opening the Iono MKR Base case, disconnect all power sources and any connection to external devices, including USB cables.

Use a non-conductive pin or small tool to help extract the battery from its holder. Insert the new battery with a gentle push. You don't need tools to insert the battery. The battery is held into place by a spring contact.

Be sure to insert the battery so that the positive (+) terminal of the battery is in contact with the outer body of the battery holder, and the negative (-) terminal is in contact with the contact pad of the circuit board, as shown in the photo below.

Reversing the battery polarity may damage the product.

The real time clock will reset its time immediately when the RTC backup battery is disconnected.

ATECC608 secure element

Iono MKR can be shipped with an optional, factory-installed hardware secure element chip, the ATECC608 from Microchip. The ATECC608 is connected to the to the Arduino MKR via the I2C bus (address: 0x60).

Its key features are:

- ✓ Cryptographic co-processor with secure hardware-based key storage
- ✓ Protected storage for up to 16 Keys, certificates or data
- ✓ Hardware support for asymmetric sign, verify, key agreement – ECDSA: FIPS186-3 Elliptic Curve Digital Signature
    - ✓ ECDH: FIPS SP800-56A Elliptic Curve Diffie-Hellman
    - ✓ NIST standard P256 elliptic curve support
- ✓ Hardware support for symmetric algorithms

- ✓ SHA-256 & HMAC hash including off-chip context save/restore
- ✓ AES-128: encrypt/decrypt, Galois field multiply for GCM

✓ Networking key management support

- ✓ Turnkey PRF/HKDF calculation for TLS 1.2 & 1.3
- ✓ Ephemeral key generation and key agreement in SRAM – Small message encryption with keys entirely protected

✓ Secure boot support

- ✓ Full ECDSA code signature validation, optional stored digest/signature – optional communication key disablement prior to secure boot
- ✓ Encryption/Authentication for messages to prevent on-board attacks

✓ Internal high-quality FIPS 800-90 A/B/C Random Number Generator (RNG)

✓ Two high-endurance monotonic counters

✓ Guaranteed unique 72-bit serial number.

Earthquake sensor module

Iono MKR can be shipped with an optional, factory-installed earthquake sensor module based on the OMRON D7S vibration sensor. It is connected to the Arduino MKR via the I2C bus.

This module is soldered to the top-level circuit board and cannot be removed by the user.

Block diagram

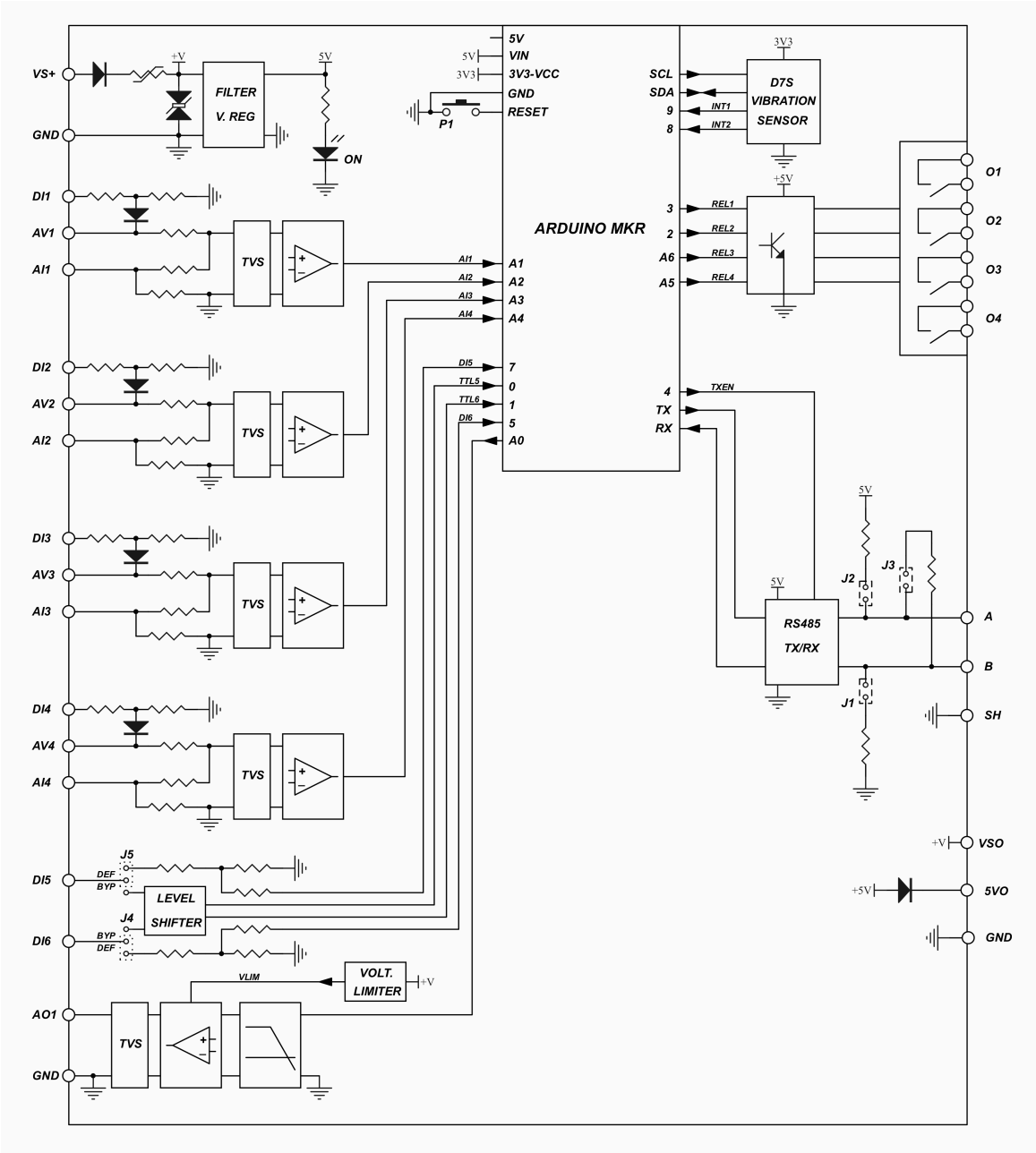

BLOCK DIAGRAM

Board layout

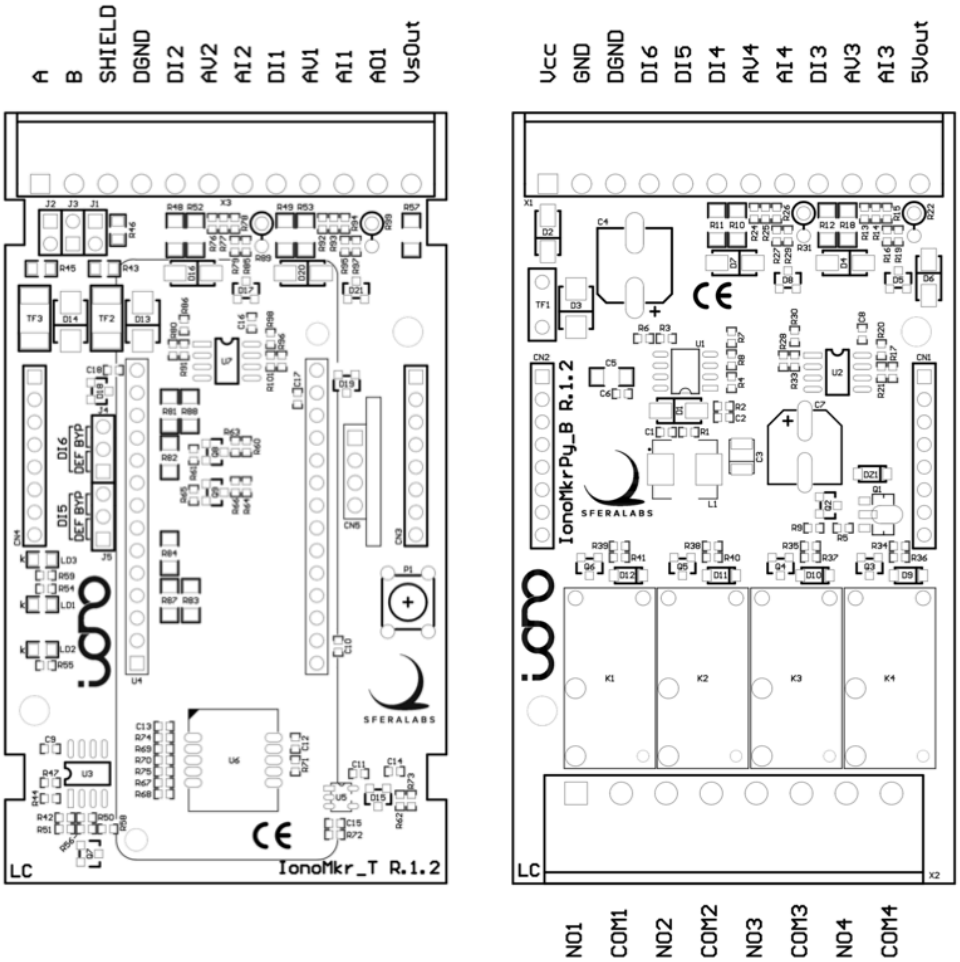

BOARD LAYOUT

Technical specifications

Power supply	12…28V⎓ nom. (11…30V⎓) Reverse polarity and surge protection up to ±500V/ 2ohms 1.2/50µs using an auto resetting fuse and diodes
Current consumption at VS+ 12V⎓ unconnected inputs and relays off	70mA with Arduino MKR1000 WiFi
Current consumption at VS+ 12V⎓ digital inputs closed to VSO and relays on	165mA with Arduino MKR1000 WiFi
Current consumption at VS+ 24V⎓ unconnected inputs and relays off	40mA with Arduino MKR1000 WiFi
Current consumption at VS+ 24V⎓ digital inputs closed to VSO and relays on	115mA with Arduino MKR1000 WiFi
Arduino platform compatibility	Arduino MKR WiFi 1010, Arduino MKR1000 WiFi (with headers), Arduino MKR ZERO, Arduino MKR GSM 1400, Arduino MKR FOX 1200, Arduino MKR WAN 1300, Arduino MKR WAN 1310
Inputs	4 multi-mode (digital or analog 0…30V or 0…25mA) 2 digital (also configurable as TTL I/O)
Voltage range at digital inputs (1-4)	0…40V⎓
Current for each digital input (1-4)	2.9mA at VS+ 12V⎓ 5.8mA at VS+ 24V⎓
Voltage threshold digital inputs 1-4 (typ.)	VIH: 4.6V VIL: 3.8V
Voltage range at digital inputs (5-6)	0…40V⎓ in normal mode 0…5V⎓ in TTL mode
Current for each digital input (5-6)	1.8mA at VS+ 12V⎓ 3.5mA at VS+ 24V⎓
Voltage threshold digital inputs 5-6 (typ.)	VIH: 4.7V VIL: 3.9V
Impedance for analog 0…10V inputs (1¸4)	410kΩ
Impedance for analog 0…20mA inputs (1-4)	130Ω
Analog inputs characteristics	Resolution: 12 bits Linearity: ±1LSB MAX error: ±2% of full scale

Max cable length for digital inputs (1-6)	30 meters
Max cable length for analog inputs (1-4)	15 meters
Digital outputs	4 power relays with single coil
Relay outputs rating	• Rated current: 6 A • Rated voltage: 250 V AC • Rated load (AC1, resistive load): 1500 VA • Rated load (AC15, cos ϕ = 0.5): 250 VA • Single phase motor rating (230 V AC): 185 W • Breaking capacity (DC1): - 3 A at 30 V DC - 0.35 A at 110 V DC - 0.2 A at 220 V DC • Electrical life at rated load AC1: 50000 cycles • Mechanical life: 20000000 cycles • Operate/release time: 6/4 ms • Dielectric strength between open contacts: 1000 V AC • Type of insulation between coil and contacts: Basic • Dielectric strength between coil and contacts: 4000 V AC
Analog output (AO1)	0…10V PWM controlled by Arduino PWM out max 30 mA source/sink current
Analog output (AO1) voltage output error	2% of full scale
AUX VSO	Max allowable current: 300mA Min voltage: (Supply voltage) - 1V
AUX 5VO	Max allowable current: 50mA Min voltage: 4.5V
Communication ports	RS-485 half-duplex with data direction management controlled by Arduino MKR pin 4
Baud Rates on COMM ports	1200 to 115200
ESD-Protection Voltage on RS-485 A/B	±15kV human body model ±8kV contact discharge
Surge protection on RS-485 A/B	Surge protection up to ±500V/2ohms 1.2/50µs; 600W peak pulse power capability at 10/1000µs waveform
Fail safe feature on RS-485	Optional with jumpers (not installed)
12-pin terminal block characteristics	Maximum conductor cross section: 1.5 mm2 (16 AWG), or 0.5 mm2 when using ferrules (highly recommended) Recommended stripping length: 5 mm Screw thread: M2 Maximum screws tightening torque: 0.25 Nm

8-pin terminal block characteristics	Maximum conductor cross section: 2.5 mm2 (12 AWG) Recommended stripping length: 7 mm Screw thread: M3 Maximum screws tightening torque: 0.6 Nm
Housing	standard 3M for DIN rail
Operating temperature	0…+50 °C
Storage temperature	-20…+70 °C
Relative humidity	5% to 90% noncondensing
Protection degree	IP20
Weight	128 g (Iono MKR) 160 g (Iono MKR with Arduino MKR1010 WiFi)

Dimensions

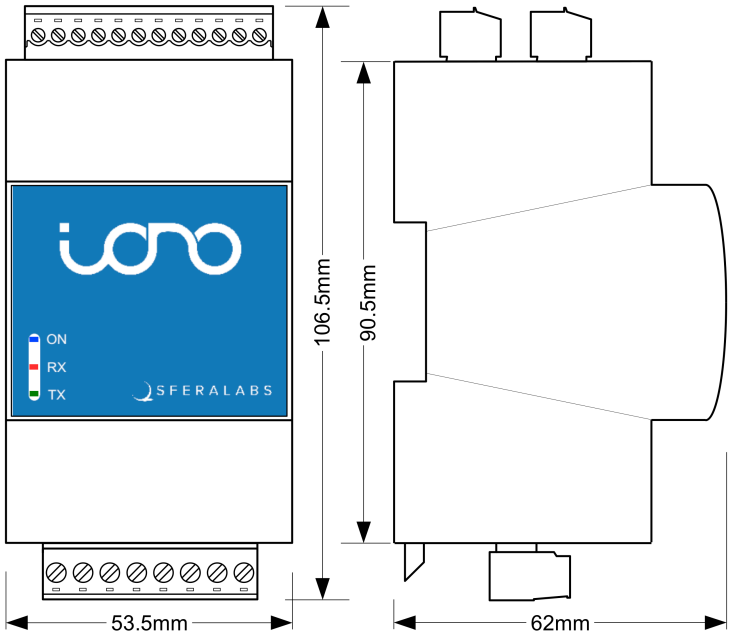

DIMENSIONS

Disposal

(Waste Electrical & Electronic Equipment)

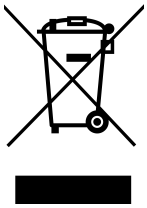

(Applicable in the European Union and other European countries with separate collection systems). This marking on the product, accessories or literature indicates that the product should not be disposed of with other household waste at the end of their working life. To prevent possible harm to the environment or human health from uncontrolled waste disposal, please separate these items from other types of waste and recycle them responsibly to promote the sustainable reuse of material resources. Household users should contact either the retailer where they purchased this product, or their local government office, for details of where and how they can take these items for environmentally safe recycling. This product and its electronic accessories should not be mixed with other commercial wastes for disposal.

Installation and use restrictions

Standards and regulations

The design and the setting up of electrical systems must be performed according to the relevant standards, guidelines, specifications and regulations of the relevant country. The installation, configuration and programming of the devices must be carried out by trained personnel.

The installation and wiring of connected devices must be performed according to the recommendations of the manufacturers (reported on the specific data sheet of the product) and according to the applicable standards.

All the relevant safety regulations, e.g. accident prevention regulations, law on technical work equipment, must also be observed.

Safety instructions

Carefully read the safety information section at the beginning of this document.

Set-up

For the first installation of the device proceed according to the following procedure:

- ✓ make sure all power supplies are disconnected
- ✓ install and wire the device according to the schematic diagrams on the specific data sheet of the product
- ✓ after completing the previous steps, switch on the 230 Vac supplying the power supply and the other related circuits.

Conformity Information

The declaration of conformity is available on the internet at the following address:

https://www.sferalabs.cc/iono-mkr/

EU

This device complies with the essential requirements of the following directives and harmonised standards:

- ✓ 2014/35/UE (Low Voltage)
- ✓ 2014/30/UE (EMC)
- ✓ EN61000-6-1:2007 (EMC Immunity for residential, commercial and light-industrial environments)
- ✓ EN60664-1:2007 (Electrical safety)
- ✓ EN 61000-6-3:2007/A1:2011/AC:2012 (EMC Emission for residential, commercial and light-industrial environments)
- ✓ 2011/65/EU and 2015/863/EU - Restriction of the use of certain hazardous substances in electrical and electronic equipment (RoHS)

USA

FCC Radio Frequency Interference Statement:

This equipment has been tested and found to comply with the limits for a Class B digital device, pursuant to part 15 of the FCC Rules. These limits are designed to provide reasonable protection against harmful interference in a residential installation. This equipment generates, uses and can radiate radio frequency energy and, if not installed and used in accordance with the instructions, may cause harmful interference to radio communications. However, there is no guarantee that interference will not occur in a particular installation. If this equipment does cause harmful interference to radio or television reception, which can be determined by turning the equipment off and on, the user is encouraged to try to correct the interference by one or more of the following measures:

- Reorient or relocate the receiving antenna
- Increase the separation between the equipment and receiver
- Connect the equipment into an outlet on a circuit different from that to which the receiver is connected
- Consult the dealer or an experienced radio/TV technician for help.

Shielded Cables:

Shielded cables must be used with this equipment to maintain compliance with FCC regulations.

Modifications:

Changes or modifications not expressly approved by the party responsible for compliance could void the user's authority to operate the equipment.

Conditions of Operations:

This device complies with Part 15 of the FCC Rules. Operation is subject to the following two conditions: (1) this device may not cause harmful interference, and (2) this device must accept any interference received, including interference that may cause undesired operation.

CANADA

This Class B digital apparatus complies with Canadian ICES-003(B).

Cet appareil numérique de la classe B est conforme à la norme NMB-003(B) du Canada.

RCM AUSTRALIA / NEW ZEALAND

This product meets the requirements of the standard EN 61000-6-3:2007/A1:2011/AC:2012 - Emission for residential, commercial and light-industrial environments.