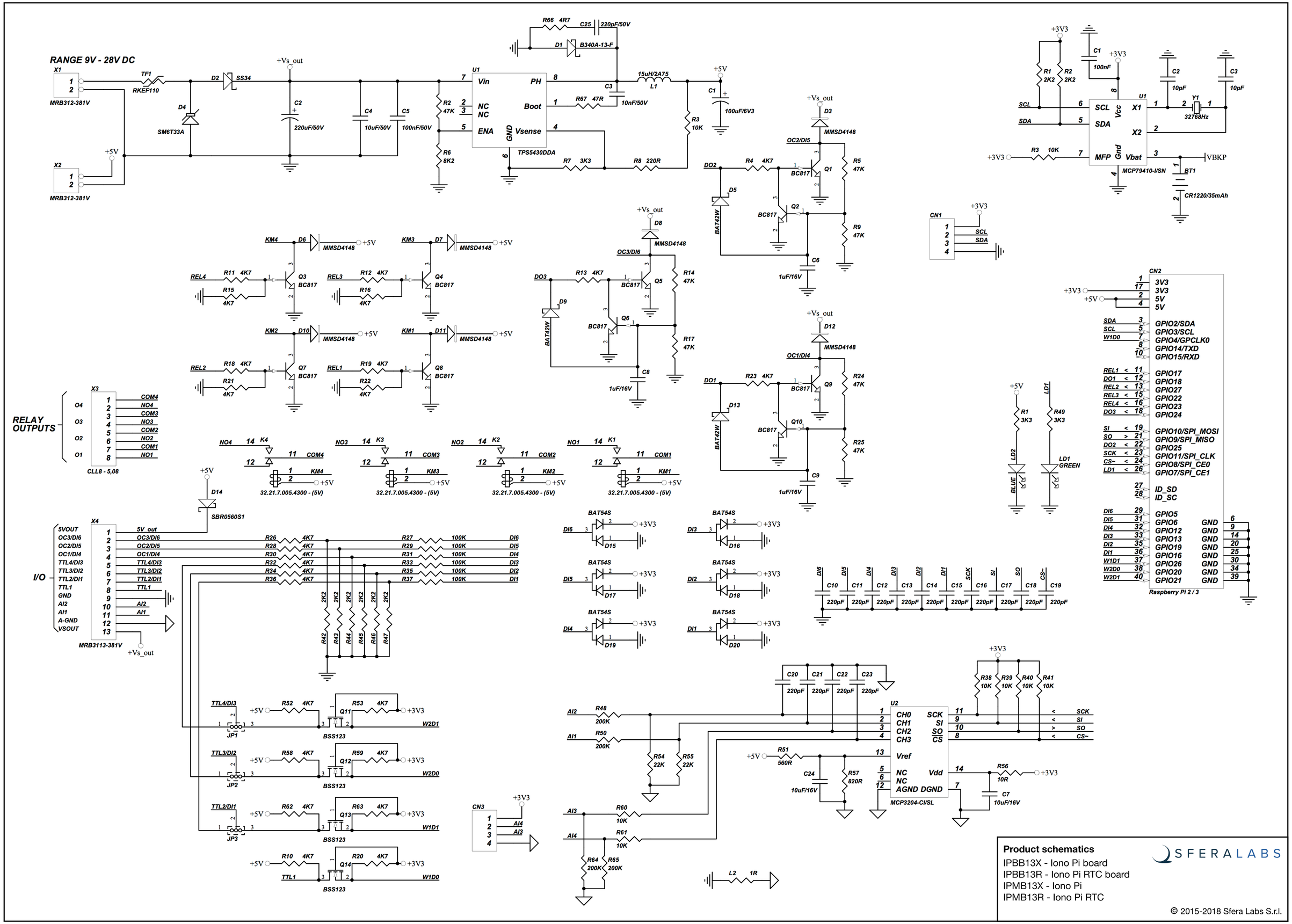
RANGE 9V - 28V DC
X1
MRB312-381V
X2
MRB312-381V
TF1
RKEF110
D2
SS34
D4
SM6T33A
+Vs_out
C2
220uF/50V
C4
10uF/50V
C5
100nF/50V
R2
47K
R6
8K2
U1
Vin
NC
NC
ENA
GND
PH
Boot
Vsense
TPS5430DDA
R66 4R7
C25 220pF/50V
D1 B340A-13-F
C3
10nF/50V
R67 47R
15uH/2A75
L1
R7 3K3
R8 220R
R3
10K
+5V
C1
100uF/6V3
+3V3
R1
2K2
R2
2K2
C1
100nF
C2
10pF
C3
10pF
Y1
32768Hz
SCL
SDA
Vcc
X1
X2
MFP
Gnd
Vbat
MCP79410-I/SN
VBKP
BT1
CR1220/35mAh
CN1
SCL
SDA
D3
MMSD4148
OC2/DI5
DO2
R4 4K7
BC817
Q1
Q2
R5
47K
R9
47K
D5
BAT42W
C6
1uF/16V
D8
OC3/DI6
DO3
R13 4K7
Q5
Q6
R14
47K
R17
47K
D9
C8
1uF/16V
D12
OC1/DI4
DO1
R23 4K7
Q9
Q10
R24
47K
R25
47K
D13
C9
1uF/16V
KM4
D6
KM3
D7
REL4
R11 4K7
R15
4K7
Q3
BC817
REL3
R12 4K7
R16
4K7
Q4
KM2
D10
KM1
D11
REL2
R18 4K7
R21
4K7
Q7
REL1
R19 4K7
R22
4K7
Q8
X3
RELAY OUTPUTS
O4
O3
O2
O1
COM4
NO4
COM3
NO3
COM2
NO2
COM1
NO1
CLL8 - 5,08
K4
K3
K2
K1
32.21.7.005.4300 - (5V)
D14
SBR0560S1
X4
I/O
5VOUT
OC3/DI6
OC2/DI5
OC1/DI4
TTL4/DI3
TTL3/DI2
TTL2/DI1
TTL1
GND
AI2
AI1
A-GND
VSOUT
5V_out
MRB3113-381V
R26 4K7
R28 4K7
R30 4K7
R32 4K7
R34 4K7
R36 4K7
R27 100K
R29 100K
R31 100K
R33 100K
R35 100K
R37 100K
DI6
DI5
DI4
DI3
DI2
DI1
2K2
R42
R43
R44
R45
R46
R47
BAT54S
D15
D16
D17
D18
D19
D20
C10
C11
C12
C13
C14
C15
C16
C17
C18
C19
220pF
LD1
R49
3K3
LD2
BLUE
LD1
GREEN
CN2
3V3
5V
GPIO2/SDA
GPIO3/SCL
GPIO4/GPCLK0
GPIO14/TXD
GPIO15/RXD
GPIO17
GPIO18
GPIO27
GPIO22
GPIO23
GPIO24
GPIO10/SPI_MOSI
GPIO9/SPI_MISO
GPIO25
GPIO11/SPI_CLK
GPIO8/SPI_CE0
GPIO7/SPI_CE1
ID_SD
ID_SC
GPIO5
GPIO6
GPIO12
GPIO13
GPIO19
GPIO16
GPIO26
GPIO20
GPIO21
GND
Raspberry Pi 2 / 3
TTL4/DI3
TTL3/DI2
TTL2/DI1
TTL1
JP1
JP2
JP3
R52 4K7
R53 4K7
Q11
R58 4K7
R59 4K7
Q12
R62 4K7
R63 4K7
Q13
R10 4K7
R20 4K7
Q14
BSS123
W2D1
W2D0
W1D1
W1D0
CN3
AI4
AI3
R48
200K
R50
200K
R54
22K
R55
22K
R60
10K
R61
10K
R64
200K
R65
200K
C20
C21
C22
C23
220pF
U2
CH0
CH1
CH2
CH3
Vref
NC
NC
AGND
DGND
SCK
SI
SO
CS
Vdd
MCP3204-CI/SL
R51
560R
C24
10uF/16V
R57
820R
R38
10K
R39
10K
R40
10K
R41
10K
R56
10R
C7
10uF/16V
L2
1R
Product schematics
IPBB13X - Iono Pi board
IPBB13R - Iono Pi RTC board
IPMB13X - Iono Pi
IPMB13R - Iono Pi RTC
SFERALABS
© 2015-2018 Sfera Labs S.r.l.