Iono Pi User Guide

September 2018

Revision 006

IPBB13X *Iono Pi board*

IPBB13R *Iono Pi RTC board*

IPMB13X *Iono Pi with Raspberry Pi 3 Model B*

IPMB13R *Iono Pi RTC with Raspberry Pi 3 Model B*

IPMB13XP *Iono Pi with Raspberry Pi 3 Model B+*

IPMB13RP *Iono Pi RTC with Raspberry Pi 3 Model B+*

SFERALABS

Safety information 4
Qualified personnel 4
Hazard levels 4
Safety instructions 5
General safety instructions 5
Battery 5
Introduction 7
Features 8
Hardware Installation 9
Iono Pi board 9
Iono Pi 9
Replacing the RTC backup battery 9
Usage and connections 11
Terminal blocks 12
Input/Output mapping 13
Power supply 14
Auxiliary voltage outputs 14
AIx: Analog inputs 15
Ox: Relays 16
L1: On-board application LED 16
TTL1: 1-Wire input/output 16
TTLx/DIx: TTL input/output or generic digital inputs 16
OCx/DIx: Open collector outputs or generic digital inputs 18
Real Time Clock 19
Software installation and configuration 20
Installing the Iono Pi utility 20
Installing the Real Time Clock software 21
Testing the Real Time Clock 21
Disabling Bluetooth and WiFi 22
Software development 23
Java and C application libraries 23
Analog inputs 23
Block diagram 25
Technical specifications 26
Dimensions 28
Disposal 29

Installation and use restrictions 29
Standards and regulations 29
Safety instructions 29
Set-up 29
Conformity Information 30
EU 30
USA 30
CANADA 31
AUSTRALIA / NEW ZEALAND 31
Compliance information for Raspberry Pi 3 Model B 31
EU 31
USA 31
CANADA 31
Compliance information for Raspberry Pi 3 Model B+ 32
EU 32
USA 32
CANADA 32

Be sure to always remove the power supply before connecting or disconnecting the Iono Pi board to Raspberry Pi.

Follow all applicable electrical safety standards, guidelines, specifications and regulations for installation, wiring and operations of Iono Pi.

Carefully and fully read this Iono Pi user guide before installation.

Iono Pi is not authorised for use in safety-critical applications where a failure of the product would reasonably be expected to cause personal injury or death. Safety-critical applications include, without limitation, life support devices and systems, equipment or systems for the operation of nuclear facilities and weapons systems. Iono Pi is neither designed nor intended for use in critical military or aerospace applications or environments and for automotive applications or environment. Customer acknowledges and agrees that any such use of Iono Pi is solely at Customer's risk, and that Customer is solely responsible for compliance with all legal and regulatory requirements in connection with such use.

Sfera Labs S.r.l. may make changes to specifications and product descriptions at any time, without notice. The product information on the web site or materials is subject to change without notice.

Please download and read the Sfera Labs Terms and Conditions document available at:

http://www.sferalabs.cc

Iono and Sfera Labs are trademarks of Sfera Labs S.r.l. Other brands and names may be claimed as the property of others.

Copyright © 2015-2018 Sfera Labs S.r.l. All rights reserved.

Safety information

Carefully and fully read this user guide before installation and retain it for future reference.

Qualified personnel

The product described in this manual must be operated only by personnel qualified for the specific task and installation environment, in accordance with all relevant documentation and safety instructions. A qualified person should be capable of fully identifying all installation and operation risks and avoid potential hazards when working with this product.

Hazard levels

This manual contains information you must observe to ensure your personal safety and prevent damage to property. Safety information in this manual are highlighted by the safety symbols below, graded according to the degree of danger.

DANGER

Indicates a hazardous situation which, if not avoided, **will** result in death or serious personal injury.

WARNING

Indicates a hazardous situation which, if not avoided, **may** result in death or serious personal injury.

CAUTION

Indicates a hazardous situation which, if not avoided, can result in minor or moderate personal injury.

NOTICE

Indicates a situation which, if not avoided, can result in damage of property.

Safety instructions

General safety instructions

Protect the unit against moisture, dirt and any kind of damage during transport, storage and operation. Do not operate the unit outside the specified technical data.

Never open the housing. If not otherwise specified, install in closed housing (e.g. distribution cabinet). Earth the unit at the terminals provided, if existing, for this purpose. Do not obstruct cooling of the unit. Keep out of the reach of children.

WARNING

Life threatening voltages are present within and around an open control cabinet.

When installing this product in a control cabinet or any other areas where dangerous voltages are present, always switch off the power supply to the cabinet or equipment.

WARNING

Risk of fire if not installed and operated properly.

Follow all applicable electrical safety standards, guidelines, specifications and regulations for installation, wiring and operations of this product.

The Raspberry Pi board could generate a substantial amount of heat when the software forces the CPU and/or GPU to operate at high load levels. Ensure that the product is properly installed and ventilated to prevent overheat.

NOTICE

The connection of expansion devices to this product may damage the product and other connected systems, and may violate safety rules and regulations regarding radio interference and electromagnetic compatibility.

Use only appropriate tools when installing this product. Using excessive force with tools may damage the product, alter its characteristics or degrade its safety.

Battery

Iono Pi RTC uses a small lithium non-rechargeable battery to power its internal real time clock (RTC).

WARNING

Improper handling of lithium batteries can result in an explosion of the batteries and/or release of harmful substances.

Worn-out or defective batteries can compromise the function of this product.

Replace the RTC lithium battery before it is completely discharged. The lithium battery must be replaced only with an identical battery. See the "Replacing the RTC backup battery" section for instructions.

Do not throw lithium batteries into fire, do not solder on the cell body, do not recharge, do not open, do not short-circuit, do not reverse polarity, do not heat above 100°C and protect from direct sunlight, moisture and condensation.

Dispose of used batteries according to local regulations and the battery manufacturer's instructions.

Introduction

Iono Pi is an extremely versatile I/O module that combines several digital and analog input lines, support for standard interfaces like 1-Wire and Wiegand and power relay outputs, typical of modern PLCs, with the powerful quad-core ARM Cortex-A53 64-bit processor of the Raspberry Pi 3.

Iono Pi adds other important features that are essential to use the Raspberry Pi 3 for professional applications, like a robust power supply with wide voltage range (9÷28Vdc) capable of up to 2.5A output current at 5V to the Raspberry Pi board, and an optional real time clock with lithium back-up battery (Iono Pi RTC version).

Iono Pi can be used for an incredible range of applications, from data acquisition and control, to home and building automation, as well as access control, hotel room control solutions, environmental monitoring and many others. Software development is pure Raspberry Pi, with the constantly growing list of standard and proprietary software frameworks available on this platform.

Iono Pi can be employed both in industrial and residential environments, for professional applications where extreme reliability, ruggedness and compliance with technical and safety directives are required.

While also available as an add-on board, the fully assembled version is packaged in a compact DIN standard case with omega-rail mounts, and certified to the relevant standards, ready for use in professional installation.

The information contained in this manual covers all versions, except where explicitly stated otherwise. The bare board is called “Iono Pi board”, while the assembled unit is simply “Iono Pi”.

Features

Iono Pi board:

- ✓ 9÷28Vdc power supply, with surge and reverse polarity protection, and 1.1A resettable fuse
- ✓ up to 2.5A max current to the 5V Raspberry Pi power supply input pins (at 24Vdc)
- ✓ 4 power relay outputs rated for 6A at 250V
- ✓ 2 analog voltage inputs 0÷30V
- ✓ 2 analog voltage inputs 0÷3V on internal pin-headers
- ✓ 7 configurable digital input/output pins
- ✓ 1-Wire and Wiegand support
- ✓ optional real time clock with replaceable CR1025 Lithium / Manganese Dioxide back-up battery
- ✓ 2 on-board LEDs, one for power supply and one controlled by a Pi's GPIO line
- ✓ power supply and I/O connections on a screw terminal block.

Iono Pi assembled module:

- ✓ pre-assembled and tested Raspberry Pi 3 Model B or B+ with Iono Pi board, in a standard 4 modules DIN rail case
- ✓ side access to HDMI and 3.5mm jack for audio and composite video
- ✓ access to all USB ports and Ethernet port.

Hardware Installation

Iono Pi board

The Iono Pi board is supplied with all connectors pre-installed. No soldering is required. You should connect Iono Pi to Raspberry Pi aligning the GPIO connector. Use appropriate turrets/spacers to firmly bolt the two boards together, ensuring that no conductive part of one board touches any part of the other board.

Be particularly careful to ensure there is enough clearance between the Ethernet and USB connectors and the bottom of Iono Pi's circuit board.

NOTICE

The GPIO connector of the Iono Pi board must be perfectly aligned to the Raspberry Pi's GPIO pins. Turning on the Raspberry Pi and/or the Iono Pi board with the GPIO not correctly connected will damage both the Raspberry Pi and Iono Pi board.

Iono Pi

The Iono Pi module comes pre-assembled with a Raspberry Pi 3 Model B or B+ board, in a plastic standard DIN-rail case.

There is no need to open the case, unless you have to change the position of the jumpers that select the voltage level of the TTL/DI inputs (see below), or to replace the internal battery.

The Micro SD card (not provided) can be inserted through a small opening on the side of the case. Use a small pen or paper clip to gently push the card in its slot.

Replacing the RTC backup battery

Iono Pi has an optional hardware real time clock with a dedicated long-life non-rechargeable back-up battery.

The real time clock optional board is shipped with a replaceable Lithium / Manganese Dioxide (Li/MnO2) battery installed.

The battery is only used to power the RTC chip when the main power is not available (when the Raspberry Pi is off). Depending on operating conditions it should last up to two years if the Iono Pi board is not powered, more if the Iono Pi receives external power.

WARNING

Improper handling of lithium batteries can result in an explosion of the batteries and/or release of harmful substances.

Worn-out or defective batteries can compromise the function of this product.

KEEP OUT OF REACH OF CHILDREN. Swallowing may lead to serious injury or death in as little as 2 hours due to chemical burns and potential perforation of the esophagus. Immediately see doctor.

Replace the RTC lithium battery before it is completely discharged. Replace the battery every 5 years even if the battery is still working properly. The lithium battery must be replaced only with an identical **CR1025** Lithium / Manganese Dioxide (Li/MnO2) battery.

Do not throw lithium batteries into fire, do not solder on the cell body, do not recharge, do not open, do not short-circuit, do not reverse polarity, do not heat above 100°C and protect from direct sunlight, moisture and condensation.

Dispose of used batteries according to local regulations and the battery manufacturer's instructions.

The RTC backup battery holder is soldered to a small circuit board next to the GPIO connector. In the Iono Pi server, the battery is not accessible from the outside. You should first remove the case top body to gain access to the Iono Pi circuit board.

NOTICE

Before opening the Iono Pi case, disconnect all power sources and any connection to external devices, including USB cables.

Use a non-conductive pin or small tool to help extract the battery from its holder. Insert the new battery with a gentle push. You don't need tools to insert the battery. The battery is held into place by a spring contact.

Be sure to insert the battery so that the positive (+) terminal of the battery is in contact with the outer body of the battery holder, and the negative (-) terminal is in contact with the contact pad of the circuit board, as shown in the photo below.

Reversing the battery polarity may damage the product.

The real time clock will reset its time immediately when the RTC backup battery is disconnected.

Follow these steps, in the exact order, to open the case and replace the battery:

1. Remove the microSD card (the card will be damaged if you open the case with the card still inserted)
2. Remove the black plastic DIN rail hook
3. With a small flat screwdriver gently separate the bottom case and boards assembly from the top cover
4. Use a non-conductive pin or small tool to help extract the battery from its holder
5. Insert the new battery with a gentle push. Respect the battery polarity
6. Replace the case bottom applying a gentle pressure on the corners
7. Replace the black plastic DIN rail hook
8. Insert the microSD card.

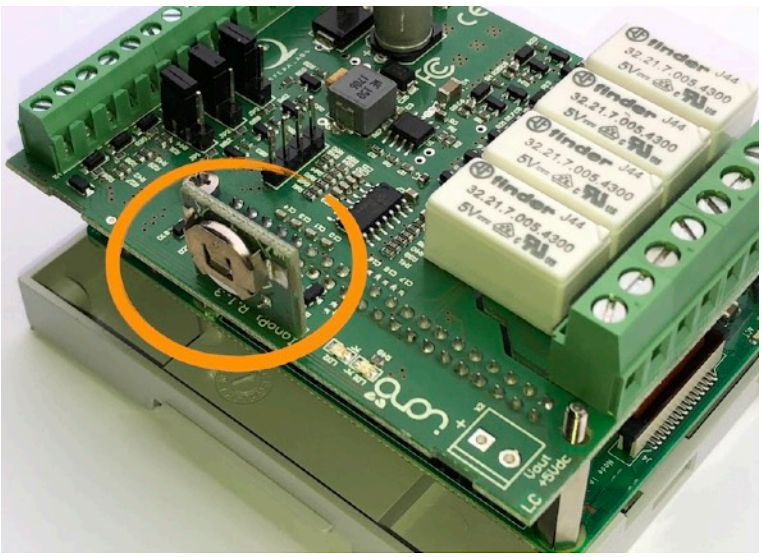

RTC BACKUP BATTERY

Usage and connections

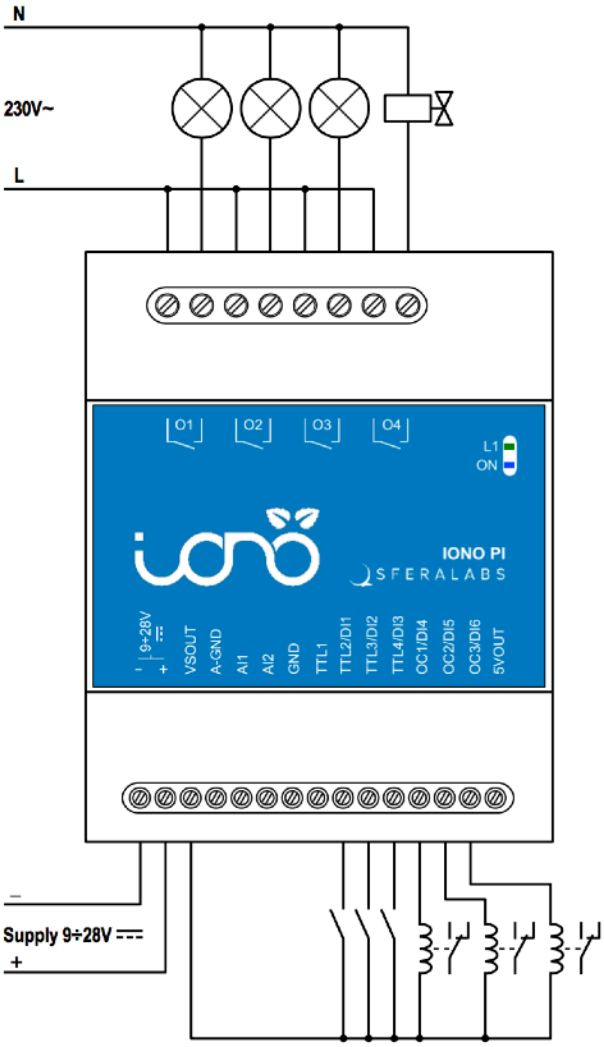

IONO PI CONNECTION EXAMPLE

Terminal blocks

Iono Pi has two terminal blocks.

A 15 positions terminal block, used for power supply and low-power input/output connections.

The maximum conductor cross section is 1.5 mm² (16 AWG), or 0.5 mm² when using ferrules (highly recommended). Recommended stripping length is 5 mm. Screw thread is M2. Never exceed 0.25 Nm torque when tightening the screws.

An 8 positions terminal block on the opposite side, for the power relays outputs.

The maximum conductor cross section is 2.5 mm² (12 AWG). Recommended stripping length is 7 mm. Screw thread is M3. Never exceed 0.6 Nm torque when tightening the screws.

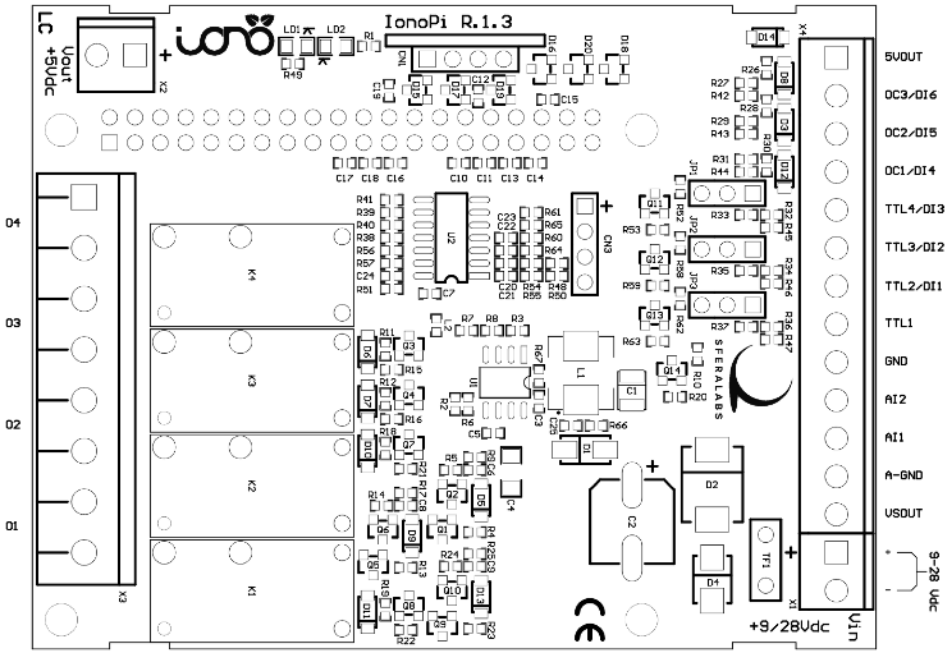

THE IONO PI CIRCUIT BOARD

Input/Output mapping

The following table shows the mapping of the inputs and outputs of the Iono Pi module into the related pins of the Raspberry Pi board. These pins should not be used for other functions.

Iono inputs and outputs	GPIO pin	Direction	Description
L1	GPIO7	out	On-board green LED
O1	GPIO17	out	Power relay 1
O2	GPIO27	out	Power relay 2
O3	GPIO22	out	Power relay 3
O4	GPIO23	out	Power relay 4
AI1		in	Analog input 1 (on terminal block) to A/D
AI2		in	Analog input 2 (on terminal block) to A/D
AI3		in	Analog input 3 (on board pin header) to A/D
AI4		in	Analog input 4 (on board pin header) to A/D
TTL1	GPIO4	in/out	1-Wire, Wiegand or generic TTL I/O
TTL2	GPIO26	in/out	1-Wire, Wiegand or generic TTL I/O
TTL3	GPIO20	in/out	1-Wire, Wiegand or generic TTL I/O
TTL4	GPIO21	in/out	1-Wire, Wiegand or generic TTL I/O
DI1	GPIO16	in	generic digital input 1
DI2	GPIO19	in	generic digital input 2
DI3	GPIO13	in	generic digital input 3
DI4	GPIO12	in	generic digital input 4
DI5	GPIO6	in	generic digital input 5
DI6	GPIO5	in	generic digital input 6
OC1	GPIO18	out	open collector output 1
OC2	GPIO25	out	open collector output 2
OC3	GPIO24	out	open collector output 3
	GPIO2/SDA		I^2C SDA line for the real time clock
	GPIO3/SCL		I^2C SCL line for the real time clock
	GPIO8/SPI_CE0		ADC SPI interface
	GPIO9/SPI_MISO		ADC SPI interface
	GPIO10/PI_MOSI		ADC SPI interface
	GPIO11/SPI_CLK		ADC SPI interface

Power supply

Iono Pi can be powered with DC voltage only:

✓ DC: nominal voltage range 9.0V to 28.0V.

Respect the correct polarity shown in the schematic diagram (+ -). The power supply circuit implements reverse polarity protection using an auto resetting fuse and surge protection up to ±500V/2ohms 1.2/50µs.

A blue on-board LED, also visible through the front panel of the DIN-rail case, is lit when power supply is available.

When a Iono Pi board is used, never connect the Raspberry Pi micro-USB power plug.

The Iono Pi power supply stage is optimised to deliver up to 3A total current at 5V. Considering the amount of current needed to drive the relays and open collector outputs, it could provide up to 2.5A at 5V to the Raspberry Pi. Because Iono Pi has a 1.1A resettable fuse (polyfuse) on the power supply line, the maximum current that its regulator can deliver is also limited by this fuse, and depends on the input voltage. The following table lists the typical measured output current of the power supply stage at different input voltages, and the corresponding input current.

		9V	12V	24V
Iout	**Vout**	**Iin**	**Iin**	**Iin**
0.1	5.02	0.1	0.08	0.05
1.0	4.99	0.69	0.52	0.26
1.3	4.98	0.90	0.68	0.34
1.5	4.97	1.04	0.79	0.39
1.6	4.97	1.14 KO	0.85	0.41
1.8	4.97		0.92	0.46
1.9	4.96		1.01	0.48
2.0	4.96		1.06	0.51
2.2	4.95		1.16 KO	0.56
2.5	4.94			0.63
3.0	4.93			0.78
3.2	4.92			0.83

IONO PI POWER SUPPLY STAGE TYPICAL IN/OUT VOLTAGE AND CURRENT

Auxiliary voltage outputs

Iono Pi has an auxiliary 5Vdc voltage output pin on the terminal block, labeled 5VOUT, to supply power to external 1-Wire devices or other low-power loads. Never exceed the maximum rated current of 50mA on this output.

Another auxiliary voltage output pin, labeled VSOUT, is also available on the terminal block. It is intended as the voltage source for small loads connected to the open collector

(OC) outputs. Its minimum output voltage is approximately VS - 1V. Do not exceed the maximum rated current of 300mA on this output.

AIx: Analog inputs

Iono Pi has two dedicated analog inputs (AI1 and AI2) on the low voltage terminal block. The voltage input range is 0-30V. We use the MCP3204 4-channel 12-Bit A/D converter from Microchip to convert the analog voltage to digital, with good resolution and sampling speed.

The input impedance is approximately 200kOhm.

For convenience, a separate analog ground connection (A-GND) is avaliable on the terminal block, next to AI1. A-GND should be used to connect the ground reference of the analog input signals. Because the analog inputs are not galvanically isolated from the Iono Pi's power supply, the A-GND line must be kept at the same voltage level of the negative power supply line (VS-) and the GND connection on the terminal block. A-GND should never be used as the negative power supply line or as a common ground for any other purpose than the analog inputs ground reference.

WARNING

The Iono Pi might be damaged if A-GND is not at the same voltage level of VS- and GND and any amount of current is allowed to flow through A-GND.

Two additional inputs (AI3 and AI4) are available on an on-board expansion header (CN3) for custom extensions. These inputs don't have a voltage divider before the converter's inputs, and accept a voltage range of 0-3V, with an input impedance of approximately 200kOhm.

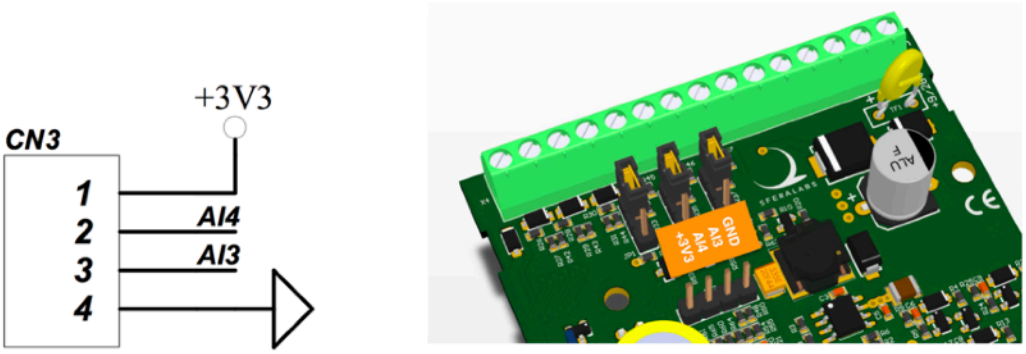

ANALOG INPUTS EXPANSION HEADER

WARNING

Never apply voltage levels outside the specified operating limits to AI1, AI2, AI3 or AI4.

Ox: Relays

Iono Pi has four single pole single throw power relays, with normally open contacts.

The relays are driven by distinct GPIO lines on the Raspberry Pi.

L1: On-board application LED

L1 is a green on-board LED that is controlled by a GPIO lines on the Raspberry Pi.

Note that, depending on the Raspberry Pi operating system's configuration, the GPIO line may be in a high state by default on startup, causing the LED to turn on before your application takes control of the GPIO line.

TTL1: 1-Wire input/output

TTL1 is a bidirectional TTL I/O line (0÷5V), connected to the Raspberry Pi GPIO4 pin through a bidirectional level shifter. It can be used as a 1-Wire bus line, but can also serve as a generic TTL I/O or as the DATA0 line of a Wiegand interface.

The TTL1 front-end circuit has a 4.7kOhm pull-up resistor.

WARNING

Never apply voltages outside the 0-5V range to this pin to avoid damage to the Iono Pi board and Raspberry Pi.

TTLx/DIx: TTL input/output or generic digital inputs

TTL2/DI1, TTL3/DI2 and TTL4/DI3 are dual-purpose pins. Using internal jumpers, they serve as TTL I/O lines or generic digital inputs.

When TTL2/DI1 is configured as TTL I/O, it can be used as the DATA1 line of a Wiegand interface, in combination with TTL1, or any other generic TTL I/O function.

TTL3/DI2, configured as TTL I/O, can be used as the DATA0 line of a second Wiegand interface, or any other generic TTL I/O function.

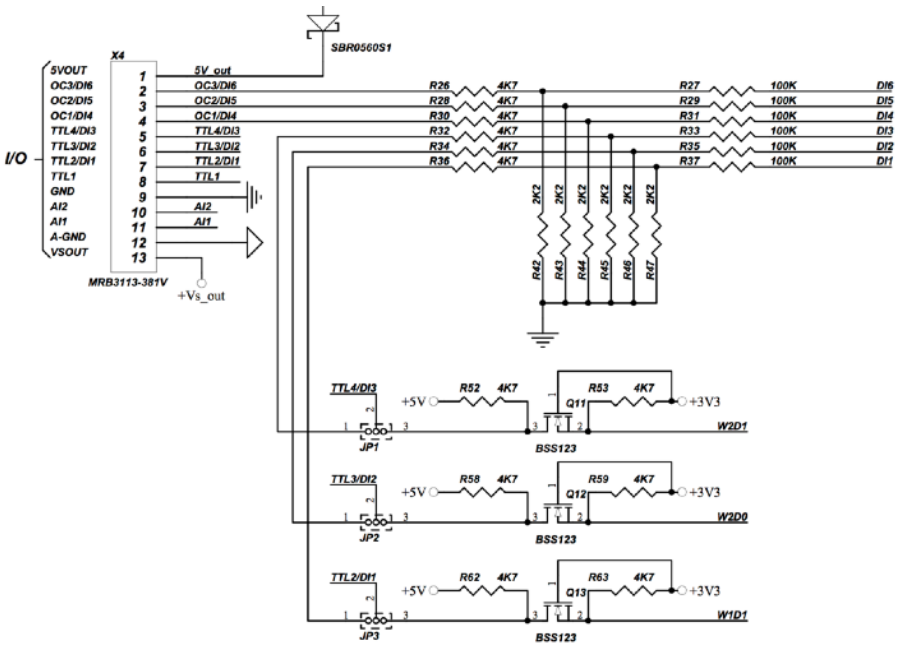

TTL LEVEL CONVERTER CIRCUIT AND INPUT MODE SELECTION JUMPERS

TTL4/DI3, configured as TTL I/O, can be used as the DATA1 line of the second Wiegand interface, in combination with TTL3, or any other generic TTL I/O function.

The TTL2-TTL4 front-end circuits have 4.7kOhm pull-up resistors.

When these pins are configured as generic digital inputs, they are protected by a resistor network, and pulled to ground when not connected. They accept positive voltage levels up to 40Vdc.

The DI1-DI3 front-end circuits have 2.2kOhm pull-down resistors.

WARNING

Never apply voltage levels outside the specified operating limits to DI1, DI2 or DI3.

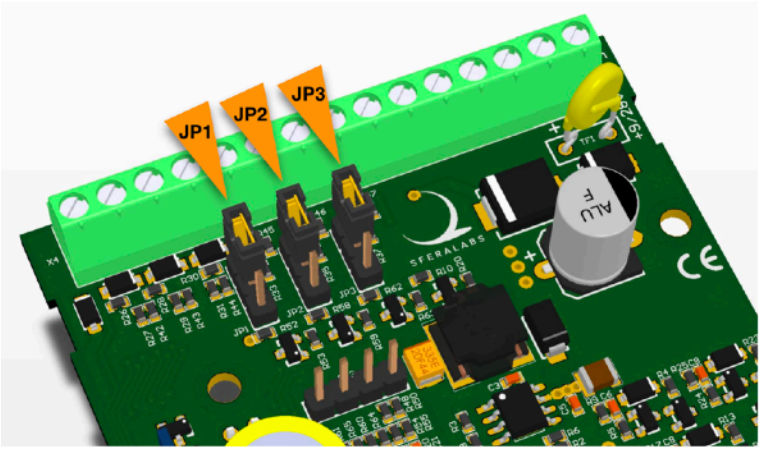

INPUT MODE SELECTION JUMPERS POSITION

To use the TTLx/DIx lines as generic inputs, the corresponding jumper (see table below) should be set across the two pins closer to the terminal block.

Set the jumpers across the center and the pin opposite the terminal block to use the input as TTL I/O.

Pin	Jumper
TTL2/DI1	JP3
TTL3/DI2	JP2
TTL4/DI3	JP1

WARNING

Note that the Iono Pi board and the Raspberry Pi could be damaged if the jumpers are configured for TTL mode and voltages outside the 0÷5V range are applied to the inputs.

OCx/DIx: Open collector outputs or generic digital inputs

OC1/DI4, OC2/DI5 and OC3/DI6 can be used as open collector (OC) outputs or generic digital inputs. They are connected to discrete open collector drivers with a maximum output current of 100mA.

These outputs are individually protected against over-current and short circuits. When the over-current protection is triggered, the output will open, stopping the current flow. A simple reset to 0 of the corresponding Raspberry Pi's GPIO pin will reset the protection.

To drive a load using an OC output, connect its positive input to the VSOUT pin and the negative input to the OC pin.

Note that the input resistors network is permanently connected to these pins so, even when the open collector driver is open (the corresponding Raspberry Pi's GPIO pin is low), a small amount of current will still be able to flow to ground through an equivalent 6.9kOhm resistor.

When not used as open collector outputs, the OC1/DI4, OC2/DI5 and OC3/DI6 can be used as generic digital inputs, like DI1-DI3. They are protected by a resistor network, pulled to ground when not connected, and accept positive voltage up to the VS power supply voltage. When used to detect the status of dry contacts, it is recommended to use VSOUT as the voltage reference.

The DI4-DI6 front-end circuits have 2.2kOhm pull-down resistors.

WARNING

Never apply voltage levels outside the specified operating limits to DI4, DI5 or DI6. Voltages above the power supply voltage (VS) will permanently damage the device.

Negative voltages may also cause device malfunction or damage.

Real Time Clock

Iono Pi has an optional hardware real time clock with a dedicated long-life non-rechargeable back-up battery.

The real time clock optional board is shipped with a replaceable Lithium / Manganese Dioxide (Li/MnO2) battery installed.

The battery is only used to power the RTC chip when the main power is not available (when the Raspberry Pi is off). Depending on operating conditions it should last up to two years if the Iono Pi board is not powered, more if the Iono Pi receives external power.

Once the RTC modules and configuration files are properly installed, you will simply use the date and time commands to control the hardware clock.

Software installation and configuration

All features of Iono Pi, except the real time clock and ADC converter, are controlled via dedicated GPIO pins and can be used with any operating system and programming language that supports the GPIO pins control on Raspberry Pi. The real time clock is interfaced via the I²C serial bus, while the ADC uses the SPI lines.

The following software installation notes are based on the Raspbian Jessie operating system.

Installing the Iono Pi utility

The Iono Pi utility is a simple command-line script to control Iono Pi's inputs and outputs.

You should enable the SPI interface to use the Iono analog to digital converter, and 1-Wire support if you need to connect 1-Wire devices.

To enable SPI, run the "raspi-config" configuration utility:

```
$ sudo raspi-config
```

Then go to "Advanced Options" (or "Interfacing Options" with the latest Raspbian builds), "SPI" and select "yes" to enable the SPI interface, then reboot your Raspberry Pi.

Also enable 1-Wire if you need it, or be sure it is disabled if you want to use TTL1 for other purposes.

Run the following commands to download and install the Iono Pi utility:

```
$ sudo apt-get install git-core
$ git clone --recursive https://github.com/sfera-labs/iono-pi-c-lib.git
$ cd iono-pi-c-lib
$ sudo sh build
```

You can run the Iono Pi utility without arguments to print its options:

```
$ iono
usage: iono <command>

Commands:
   -v              Print the version number of the ionoPi library
   led on          Turn on the green LED
   led off         Turn off the green LED
   o<n> open       Open relay output o<n> (<n>=1..4)
   o<n> close      Close relay output o<n> (<n>=1..4)
   oc<n> open      Open open collector oc<n> (<n>=1..3)
   oc<n> close     Close open collector oc<n> (<n>=1..3)
   di<n>           Print the state ("high" or "low") of digital input di<n> (<n>=1..6)
   di<n> -f        Print the state of digital input di<n> now and on every change
   ai<n>           Print the voltage value (V) read from analog input ai<n> (<n>=1..4)
   ai<n> -r        Print the raw value read from the A/D converter's channel
                    corresponding to analog input ai<n> (<n>=1..4)
   1wire bus       Print the list of device IDs found on the 1-Wire bus
   1wire bus <id>  Print the temperature value (°C) read from 1-Wire device <id>
   1wire ttl<n>    Print temperature (°C) and humidity (%) values read from the
                   MaxDetect 1-Wire sensor on TTL<n> (<n>=1..4)
   wiegand <n>     Wait for data to be available on Wiegand interface <n> (<n>=1|2)
                   and print number of bits and value read
   wiegand <n> -f  Continuously print number of bits and value read from Wiegand
                   interface <n> whenever data is available
```

Installing the Real Time Clock software

The RTC is based on the Microchip MCP79410 module and is connected to the Raspberry Pi via its I²C serial bus.

Before downloading the installation utility, you should enable I²C and install the “i2c-tools” package.

To enable I²C, run the “raspi-config” configuration utility:

```
$ sudo raspi-config
```

Then go to “Advanced Options” (or “Interfacing Options” with the latest Raspbian builds), “I2C” and select “yes” to enable the I²C interface, then reboot your Raspberry Pi.

To install the “i2c-tools” package:

```
$ sudo apt-get update
$ sudo apt-get install i2c-tools
```

With these prerequisite installs completed, you should download and run Iono Pi’s RTC installation script:

```
$ cd
$ wget http://sferalabs.cc/files/strato/rtc-install
$ chmod 755 rtc-install
$ sudo ./rtc-install
```

If the script completes with no errors, delete the installation script and reboot:

```
$ rm rtc-install
$ sudo reboot
```

Testing the Real Time Clock

Assuming you are connected to the Internet and your Pi was able to reach a public NTP (Network Time Protocol) server, you should see the current date and time using the “date” command:

```
$ date
Thu Dec 10 18:02:32 CET 2015
```

Also check the date and time stored in the hardware clock:

```
$ sudo hwclock -r
Thu 10 Dec 2015 06:03:01 PM CET  -0.546570 seconds
```

If the returned date and time is not correct, or “hwclock” returns an error, use the “-w” option to set the hardware clock to the current time:

```
$ sudo hwclock -w
```

Then recheck the time stored in the hardware clock to ensure it matches. Linux may have failed to automatically update the hardware clock after the last reboot if its internal registers contained invalid values.

If the RTC still doesn't work, you should check if the Pi sees the RTC chip on the I²C bus. Run these two commands:

```
$ sudo modprobe -r rtc_ds1307
$ sudo i2cdetect 1
WARNING! This program can confuse your I2C bus, cause data loss and worse!
I will probe file /dev/i2c-1.
I will probe address range 0x03-0x77.
Continue? [Y/n]
     0  1  2  3  4  5  6  7  8  9  a  b  c  d  e  f
00:          -- -- -- -- -- -- -- -- -- -- -- -- --
10: -- -- -- -- -- -- -- -- -- -- -- -- -- -- -- --
20: -- -- -- -- -- -- -- -- -- -- -- -- -- -- -- --
30: -- -- -- -- -- -- -- -- -- -- -- -- -- -- -- --
40: -- -- -- -- -- -- -- -- -- -- -- -- -- -- -- --
50: -- -- -- -- -- -- -- 57 -- -- -- -- -- -- -- --
60: -- -- -- -- -- -- -- -- -- -- -- -- -- -- -- 6f
70: -- -- -- -- -- -- -- —
```

You should see "6f" in the address list. This is the address of the RTC.

If the RTC address is detected, double check your software installation for issues at the Linux modules level.

Run the "lsmod" command to list the loaded modules and check that "i2c_dev" and "i2c_bcm2708" are both listed.

If the RTC address is not detected, the cause could be a hardware problem, on the Iono board or the Raspberry Pi. If you have another Pi or Iono board, try swapping them to isolate the faulty board.

Disabling Bluetooth and WiFi

The Iono Pi board works with Bluetooth and WiFi enabled, but you can disable both interfaces if you need to turn off the Raspberry Pi's onboard radios.

To disable Bluetooth, edit /boot/config.txt and add these lines at the end of the file:

```
# Disable Bluetooth
dtoverlay=pi3-disable-bt
```

You may also run the following command to disable the Bluetooth HCI UART driver:

```
sudo systemctl disable hciuart
```

To disable the WiFi, one convenient solution on Raspbian distributions is to blacklist the WiFi driver. Edit /etc/modprobe.d/raspi-blacklist.conf and add these lines at the end of the file:

```
# Disable WiFi
blacklist brcmfmac
blacklist brcmutil
```

Software development

Java and C application libraries

A C language library, released as open source software under the LGPL license and free to use also for commercial applications, is available on GitHub:

https://github.com/sfera-labs/iono-pi-c-lib

A simple Java library, released as open source software under the LGPL license and free to use also for commercial applications, is also available on GitHub:

https://github.com/sfera-labs/iono-pi-java-lib

You can use these libraries to develop your application software, but you can also write your low-level code in any language. All of Iono Pi's digital input and output pins are directly controlled using the corresponding GPIO lines from the Raspberry Pi boards (see the "Input/Output mapping" table above).

Only the analog inputs are connected to an analog to digital converter chip, using the SPI protocol.

Analog inputs

The AI1 and AI2 analog inputs on the terminal block, and the AI3 and AI4 pins on the on-board analog inputs expansion header, are connected to a Microchip MCP3204 4-channel 12-Bit A/D converter. The MCP3204 is connected to the Raspberry Pi via the SPI interface.

The MCP3204 is a very well supported chip, particularly easy to use from software on the Raspberry Pi.

The MCP3204 data sheet contains all the information you need to control the operations of the A/D converter. You should also take into account the effects of the analog front-end circuitry to convert the values read from the A/D converter to the actual voltage values.

The Iono Pi library uses a 0.007319 conversion factor for the AI1 and AI2 inputs with a 0÷30V range, and 0.000725 for AI3 and AI4 inputs with a 0÷3V range.

The SPI clock speed is set to 50kHz. A significant increase in the clock speed will affect the reliability of the A/D conversion.

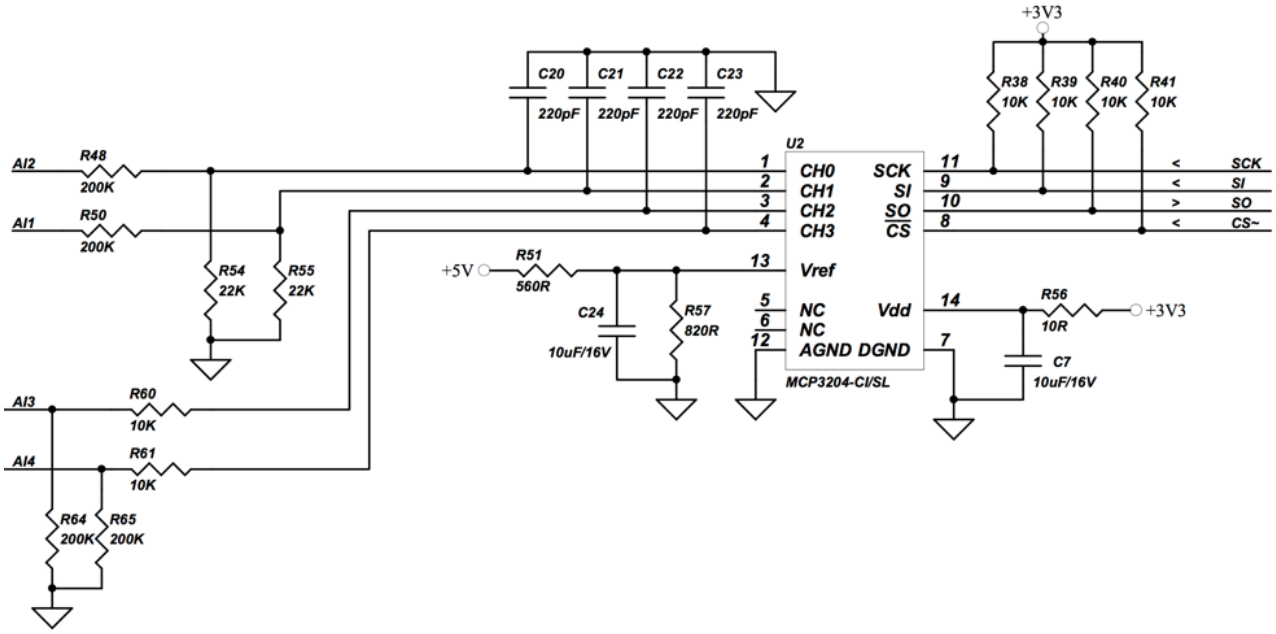

THE IONO PI A/D CIRCUIT

Block diagram

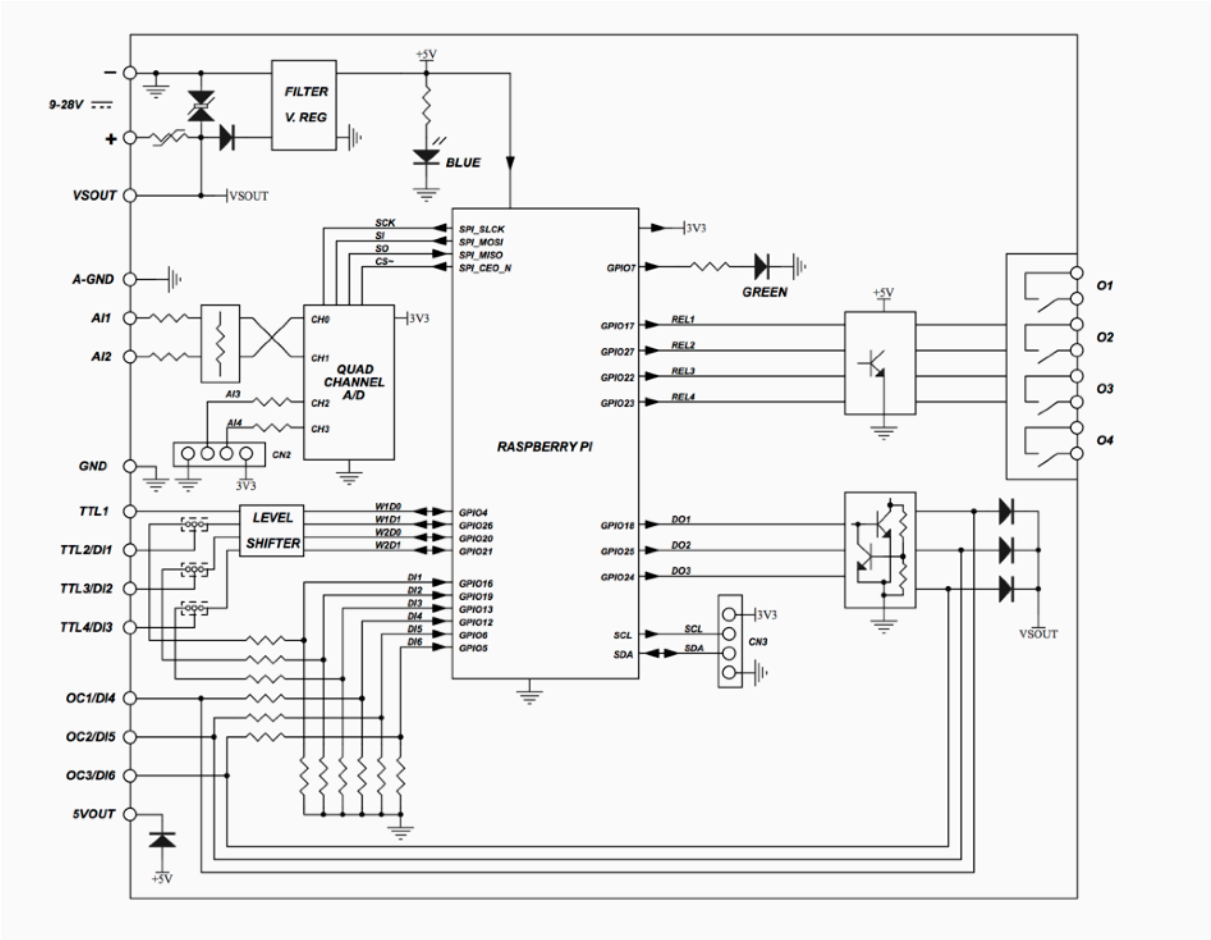

IONO PI BLOCK DIAGRAM

Technical specifications

Power supply (VS)	9÷28V⎓ (VDC) Reverse polarity protection with 1.1A resettable fuse. Surge protection up to ±500V/2ohms 1.2/50µs
Current consumption at VS+ 12V⎓ including Raspberry Pi 3 current, no USB devices connected	Low CPU/GPU load: • 135mA unconnected inputs, relays OFF • 225mA inputs connected to VSOUT, relays ON High CPU/GPU load: • 340mA unconnected inputs, relays OFF • 430mA inputs connected to VSOUT, relays ON Actual current consumption may vary based on working conditions
Current consumption at VS+ 24V⎓ including Raspberry Pi 3 current, no USB devices connected	Low CPU/GPU load: • 75mA unconnected inputs, relays OFF • 135mA inputs connected to VSOUT, relays ON High CPU/GPU load: • 170mA unconnected inputs, relays OFF • 225mA inputs connected to VSOUT, relays ON Actual current consumption may vary based on working conditions
Maximum available power supply current to Pi board	2.5A
Raspberry platform compatibility	Pi 3 Model B+ Pi 3 Model B Pi 2 Model B
Voltage range at digital inputs	DI1..DI3: 0÷40V ⎓ in normal mode; 0÷5V ⎓ in TTL mode DI4..DI6: 0÷VS+ ⎓
Current for each digital input in normal mode	DI1..DI3: • 1.7mA at VS+=12V ⎓ • 3.4mA at VS+=24V ⎓ DI4..DI6: • 1.9mA at VS+=12V ⎓ • 3.9mA at VS+=24V ⎓
Voltage threshold digital inputs in normal mode	• VIH: 4.2V • VIL: 3.4V
Voltage threshold digital inputs in TTL mode	• VIH: 2.4 V • VIL: 0.8 V
Range for analog inputs	• AI1..AI2: 0÷30V ⎓ • AI3..AI4: 0÷3V ⎓

Impedance for analog inputs	AI1..AI4: 200kOhm
Analog inputs characteristics	• Resolution: 12 bits • Linearity: ±1LSB • MAX error: ±2% of full scale
Maximum recommended cable length for digital inputs	• normal mode: 30m • TTL mode: 2m
Maximum recommended cable length for analog inputs 1-2	15m
Maximum recommended cable length for open collector outputs	2m
Maximum output contact rating (each output)	• Resistive load (cos ϕ = 1): 6A at 250V~ (1500VA) • Inductive load (cos ϕ = 0.5): 1A at 250V~ (250VA) • Fluorescent lamps:150W with 20uF MAX power factor correction capacitor • Resistive load (DC1): 1A at 48Vdc / 0.7A at 60Vdc
Open collector outputs rating	NPN type, shared with DI4..DI6, common on VSOUT, short circuit protected 100mA MAX output current
AUX VSOUT	• Max allowable current: 300mA • Min voltage: Supply voltage – 1V
AUX 5VOUT	• Max allowable current: 50mA • Min voltage: 4.5V
Real time clock (Iono Pi RTC version only)	Internal RTCC circuit with backup lithium battery. Only use CR1025 Lithium / Manganese Dioxide (Li/MnO2) batteries. Expected battery life without main power supply: ~2 years
15-pin terminal block characteristics	Maximum conductor cross section: 1.5 mm2 (16 AWG), or 0.5 mm2 when using ferrules (highly recommended) Recommended stripping length: 5 mm Screw thread: M2 Maximum screws tightening torque: 0.25 Nm
8-pin terminal block characteristics	Maximum conductor cross section: 2.5 mm2 (12 AWG) Recommended stripping length: 7 mm Screw thread: M3 Maximum screws tightening torque: 0.6 Nm
Housing	standard 4M for DIN rail
Operating temperature	0…+50 °C
Storage temperature	-20…+70 °C
Protection degree	IP20
Weight	70 g (Iono Pi board) 190 g (Iono Pi)

Dimensions

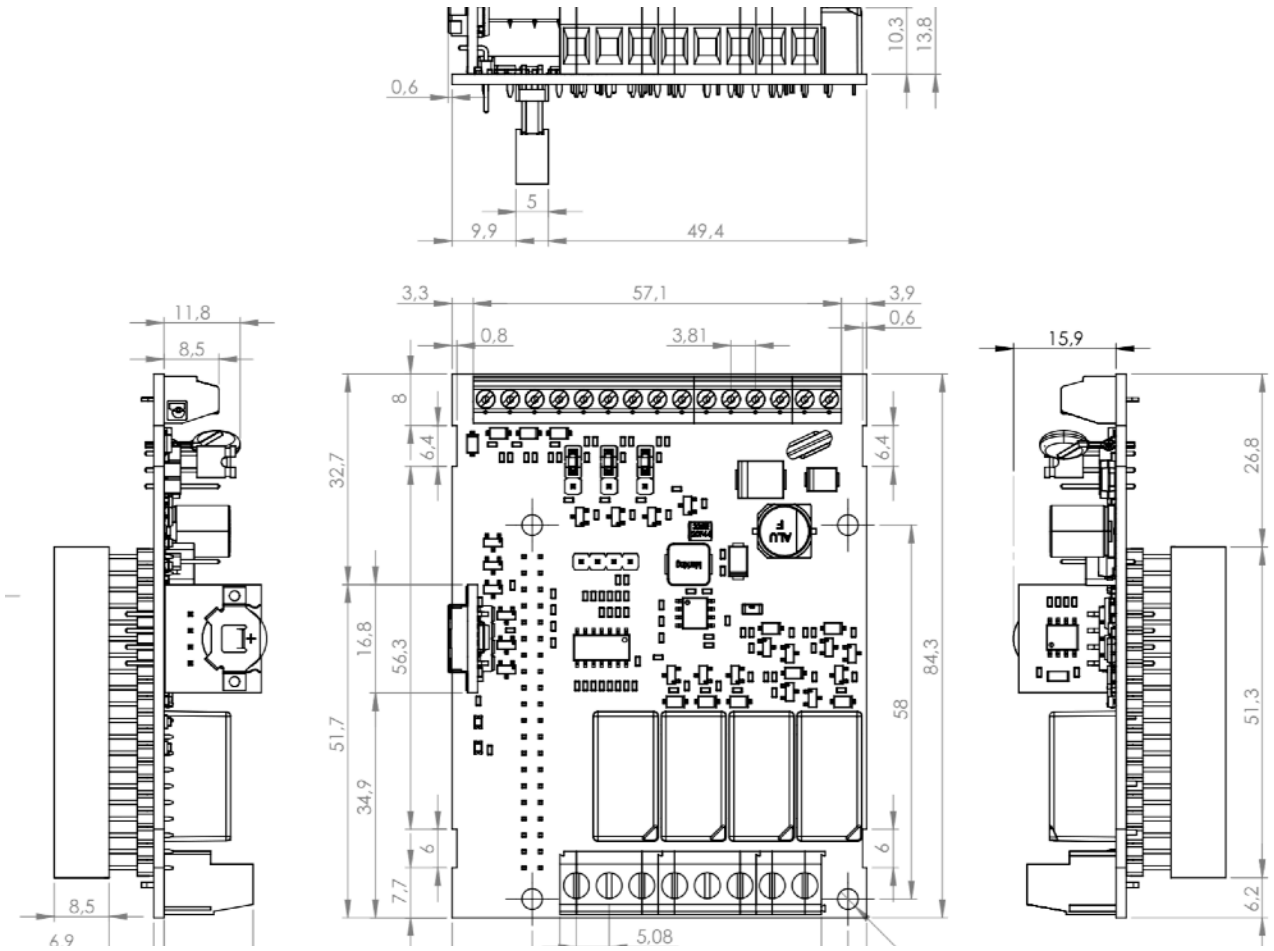

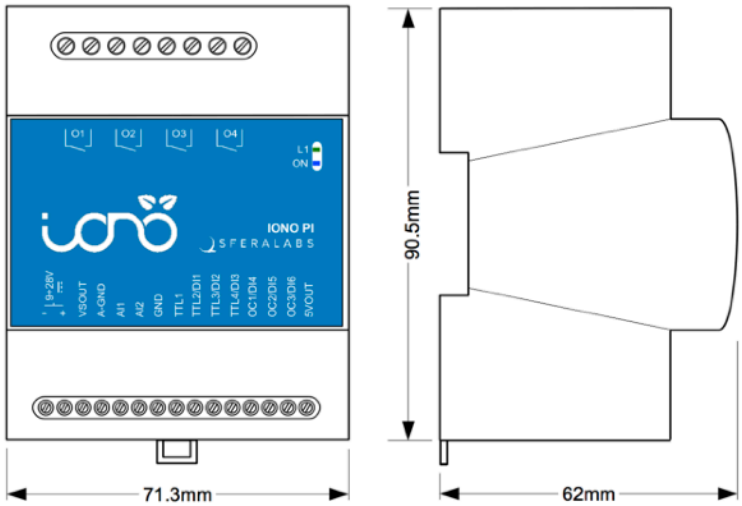

DIMENSIONS (mm)

Disposal

Waste Electrical & Electronic Equipment

(Applicable in the European Union and other European countries with separate collection systems). This marking on the product, accessories or literature indicates that the product should not be disposed of with other household waste at the end of their working life. To prevent possible harm to the environment or human health from uncontrolled waste disposal, separate these items from other types of waste and recycle them responsibly to promote the sustainable reuse of material resources. Household users should contact either the retailer where they purchased this product, or their local government office, for details of where and how they can take these items for environmentally safe recycling. This product and its electronic accessories should not be mixed with other commercial wastes for disposal.

Iono Pi RTC contains a small non rechargeable manganese dioxide lithium coin battery.

In the Iono Pi RTC, the battery is not accessible from the outside. You should first remove the case top body to gain access to the Iono Pi circuit board. Always remove the battery before disposing of this product.

Installation and use restrictions

Standards and regulations

The design and the setting up of electrical systems must be performed according to the relevant standards, guidelines, specifications and regulations of the relevant country. The installation, configuration and programming of the devices must be carried out by trained personnel.

The installation and wiring of connected devices must be performed according to the recommendations of the manufacturers (reported on the specific data sheet of the product) and according to the applicable standards.

All the relevant safety regulations, e.g. accident prevention regulations, law on technical work equipment, must also be observed.

Safety instructions

Carefully read the safety information section at the beginning of this document.

Set-up

For the first installation of the device proceed according to the following procedure:

- ✓ make sure all power supplies are disconnected
- ✓ install and wire the device according to the schematic diagrams on the specific product user guide
- ✓ after completing the previous steps, switch on the power supply and other related circuits.

Conformity Information

EU

This device complies with the essential requirements of the following directives and harmonised standards:

- ✓ 2014/35/UE (Low Voltage)
- ✓ 2014/30/UE (EMC)
- ✓ EN61000-6-2:2005 (EMC Immunity)
- ✓ EN60664-1:2007 (Electrical safety)
- ✓ EN61000-6-3:2007 (Emission for residential, commercial and light-industrial environments)
- ✓ 2011/65/UE (RoHS)

The declaration of conformity is available on the internet at the following address: https://www.sferalabs.cc/iono-pi/

USA

This equipment has been tested and found to comply with the limits for a Class B digital device, pursuant to part 15 of the FCC Rules. These limits are designed to provide reasonable protection against harmful interference in a residential installation. This equipment generates, uses and can radiate radio frequency energy and, if not installed and used in accordance with the instructions, may cause harmful interference to radio communications. However, there is no guarantee that interference will not occur in a particular installation. If this equipment does cause harmful interference to radio or television reception, which can be determined by turning the equipment off and on, the user is encouraged to try to correct the interference by one or more of the following measures:

- Reorient or relocate the receiving antenna
- Increase the separation between the equipment and receiver
- Connect the equipment into an outlet on a circuit different from that to which the receiver is connected
- Consult the dealer or an experienced radio/TV technician for help.

Shielded cables must be used with this equipment to maintain compliance with FCC regulations.

This device complies with Part 15 of the FCC Rules. Operation is subject to the following two conditions: (1) this device may not cause harmful interference, and (2) this device must accept any interference received, including interference that may cause undesired operation.

CANADA

This Class B digital apparatus complies with Canadian ICES-003.

Cet appareil numérique de la classe B est conforme à la norme NMB-003 du Canada.

AUSTRALIA / NEW ZEALAND

This equipment is compliant with Class B of CISPR 32.

Shielded cables must be used with this equipment to maintain compliance with FCC regulations.

Compliance information for Raspberry Pi 3 Model B

Iono Pi models IPMB13X and IPMB13R contain a standard Raspberry Pi 3 Model B single board computer. This board has WiFi and Bluetooth radios. It is user accessible and replaceable.

EU

Raspberry Pi 3 Model B is in conformity with the essential requirements and other relevant requirements of the Radio Equipment Directive 2014/53/EU.

USA

Raspberry Pi 3 Model B FCC IDENTIFIER: **2ABCB-RPI32**

The antenna(s) used for this transmitter must be installed to provide a separation distance of at least 20 cm from all persons and must not be colocated or operating in conjunction with any other antenna or transmitter, except in accordance with FCC multitransmitter product guidelines. This (WiFi DTS) device has 20 MHz bandwidth mode.

CANADA

Raspberry Pi 3 Model B IC CERTIFICATION No.: **20953-RPI32**

This device complies with Industry Canada license-exempt RSS standard(s). Operation is subject to the following two conditions: (1) this device may not cause interference, and (2) this device must accept any interference, including interference that may cause undesired operation of the device.

Le présent appareil est conforme aux CNR d'Industrie Canada applicables aux appareils radio exempts de licence. L'exploitation est autorisée aux deux conditions suivantes: (1) l'appareil ne doit pas produire de brouillage, et (2) l'utilisateur de l'appareil doit accepter tout brouillage radioélectrique subi, même si le brouillage est susceptible d'en compromettre le fonctionnement.

Compliance information for Raspberry Pi 3 Model B+

Iono Pi models IPMB13XP and IPMB13RP contain a standard Raspberry Pi 3 Model B+ single board computer. This board has WiFi and Bluetooth radios. It is user accessible and replaceable.

EU

Raspberry Pi 3 Model B+ is in conformity with the essential requirements and other relevant requirements of the Radio Equipment Directive 2014/53/EU.

USA

Raspberry Pi 3 Model B+ FCC IDENTIFIER: **2ABCB-RPI3P**

The antenna(s) used for this transmitter must be installed to provide a separation distance of at least 20 cm from all persons and must not be colocated or operating in conjunction with any other antenna or transmitter, except in accordance with FCC multitransmitter product guidelines. This (WiFi DTS) device has 20 MHz bandwidth mode.

CANADA

Raspberry Pi 3 Model B+ IC CERTIFICATION No.: **20953-RPI3P**

This device complies with Industry Canada license-exempt RSS standard(s). Operation is subject to the following two conditions: (1) this device may not cause interference, and (2) this device must accept any interference, including interference that may cause undesired operation of the device.

Le présent appareil est conforme aux CNR d'Industrie Canada applicables aux appareils radio exempts de licence. L'exploitation est autorisée aux deux conditions suivantes: (1) l'appareil ne doit pas produire de brouillage, et (2) l'utilisateur de l'appareil doit accepter tout brouillage radioélectrique subi, même si le brouillage est susceptible d'en compromettre le fonctionnement.