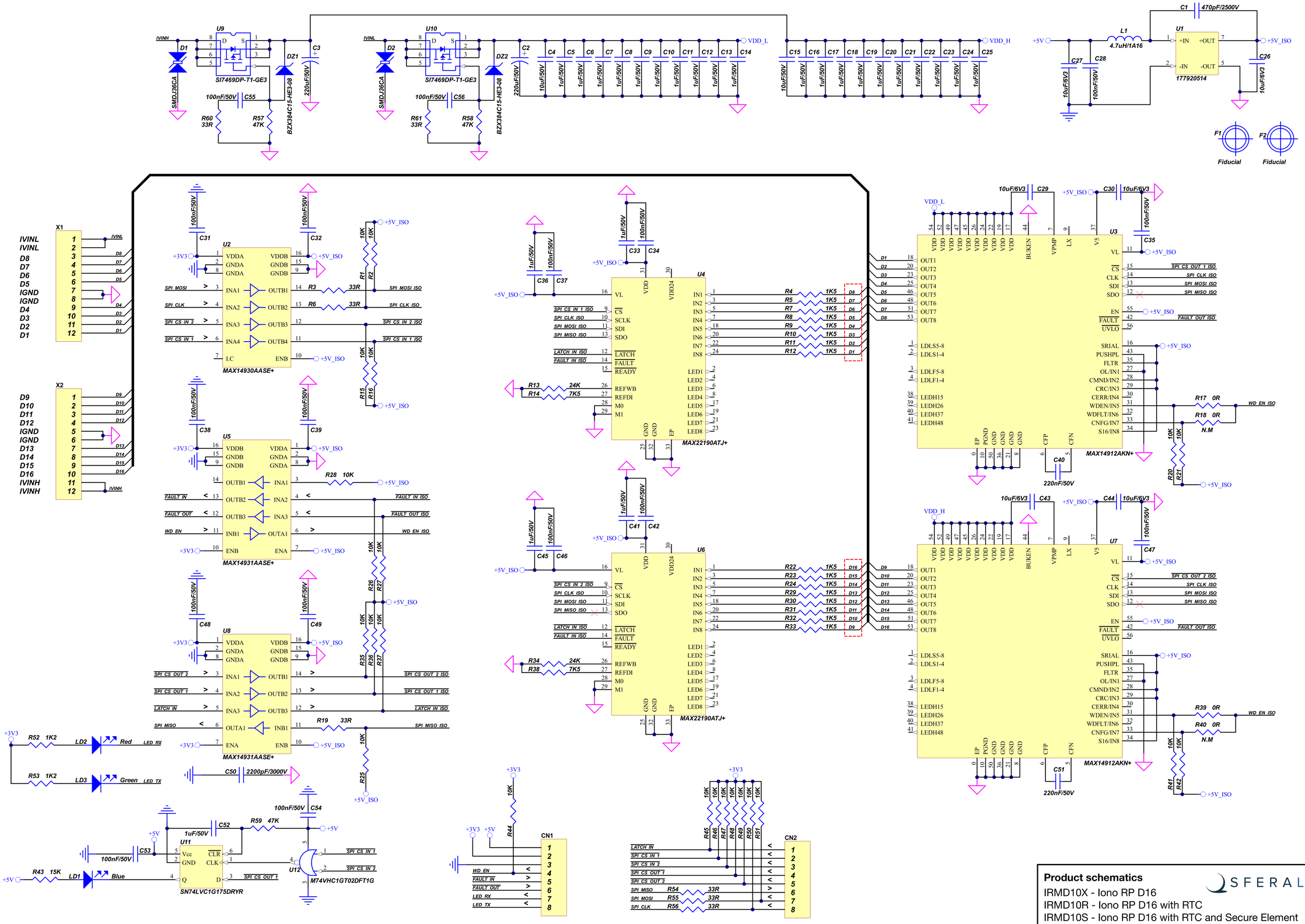

Product schematics

IRMD10X - Iono RP D16
IRMD10R - Iono RP D16 with RTC
IRMD10S - Iono RP D16 with RTC and Secure Element
(Top)

SFERALABS

© 2022 Sfera Labs S.r.l.

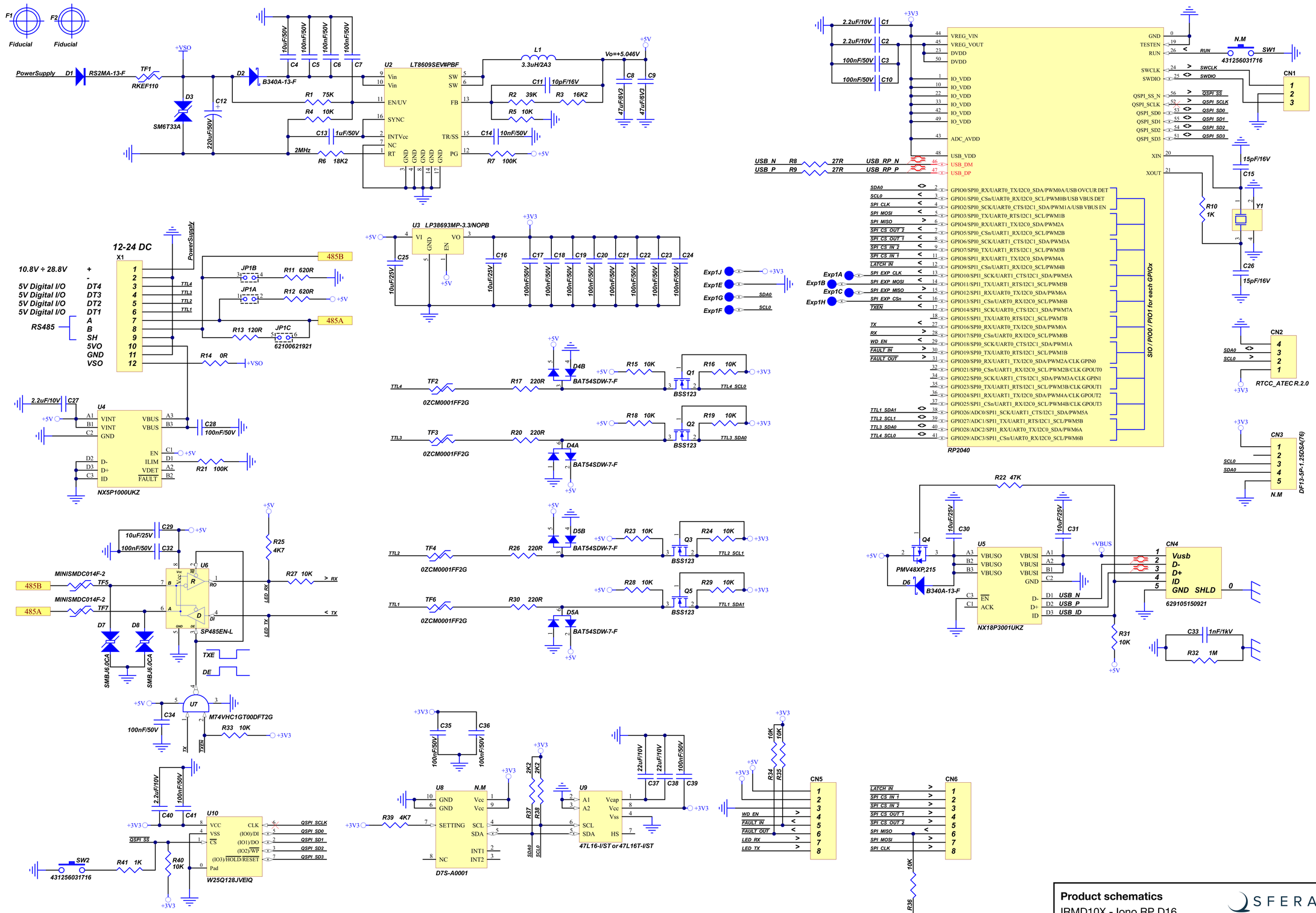

Product schematics

IRMD10X - Iono RP D16
IRMD10R - Iono RP D16 with RTC
IRMD10S - Iono RP D16 with RTC and Secure Element (Bottom)

SFERALABS

© 2022 Sfera Labs S.r.l.