Iono Uno User Guide

November 2025 - Revision 018

***IAMS21X** Iono Uno*

SFERALABS

Safety information 3
- Qualified personnel 3
- Hazard levels 3
- Safety instructions 4
  - General safety instructions 4

Introduction 5

Features 6

Usage and connections 7
- Device identification 8
- Power supply 8
- Multi-mode inputs 8
  - Analog mode 8
  - Digital mode 8
- DI5 and DI6 digital inputs 8
- Analog output 9
- Relay digital outputs 10
- RS-485 serial port 10
- Mapping 11
- Working with 5.0V and 3.3V boards 12

Hardware Installation 13

Iono Uno Software Development 15
- Programming 15
  - Arduino Uno 15
  - Arduino Ethernet 15

Block diagram 17

Board layout 18

Technical specifications 19

Dimensions 21

Disposal 22

Installation and use restrictions 22
- Standards and regulations 22
- Safety instructions 22
- Set-up 22

Conformity Information 23
- EU 23

Be sure to always remove the power supply before installing or removing the Arduino board inside Iono Uno.

Iono Uno must be operated with both side covers installed.

Follow all applicable electrical safety standards, guidelines, specifications and regulations for installation, wiring and operations of Iono Uno modules.

Carefully and fully read this Iono Uno user guide before installation.

Iono Uno is not authorised for use in safety-critical applications where a failure of the product would reasonably be expected to cause personal injury or death. Safety-critical applications include, without limitation, life support devices and systems, equipment or systems for the operation of nuclear facilities and weapons systems. Iono Uno is neither designed nor intended for use in military or aerospace applications or environments and for automotive applications or environment. Customer acknowledges and agrees that any such use of Iono Uno is solely at Customer's risk, and that Customer is solely responsible for compliance with all legal and regulatory requirements in connection with such use.

Sfera Labs S.r.l. may make changes to specifications and product descriptions at any time, without notice. The product information on the web site or materials is subject to change without notice.

Please download and read the Sfera Labs Terms and Conditions document available at:

http://www.sferalabs.cc

Iono and Sfera Labs are trademarks of Sfera Labs S.r.l. Other brands and names may be claimed as the property of others.

Copyright © 2015-2025 Sfera Labs S.r.l. All rights reserved.

Safety information

Carefully and fully read this user guide before installation and retain it for future reference.

Qualified personnel

The product described in this manual must be operated only by personnel qualified for the specific task and installation environment, in accordance with all relevant documentation and safety instructions. A qualified person should be capable of fully identifying all installation and operation risks and avoid potential hazards when working with this product.

Hazard levels

This manual contains information you must observe to ensure your personal safety and prevent damage to property. Safety information in this manual are highlighted by the safety symbols below, graded according to the degree of danger.

DANGER

Indicates a hazardous situation which, if not avoided, **will** result in death or serious personal injury.

WARNING

Indicates a hazardous situation which, if not avoided, **may** result in death or serious personal injury.

CAUTION

Indicates a hazardous situation which, if not avoided, can result in minor or moderate personal injury.

NOTICE

Indicates a situation which, if not avoided, can result in damage of property.

Safety instructions

General safety instructions

Protect the unit against moisture, dirt and any kind of damage during transport, storage and operation. Do not operate the unit outside the specified technical data.

Never open the housing. If not otherwise specified, install in closed housing (e.g. distribution cabinet). Earth the unit at the terminals provided, if existing, for this purpose. Do not obstruct cooling of the unit. Keep out of the reach of children.

WARNING

Life threatening voltages are present within and around an open control cabinet.

When installing this product in a control cabinet or any other areas where dangerous voltages are present, always switch off the power supply to the cabinet or equipment.

WARNING

Risk of fire if not installed and operated properly.

Follow all applicable electrical safety standards, guidelines, specifications and regulations for installation, wiring and operations of this product.

Ensure that the product is properly installed and ventilated to prevent overheat.

NOTICE

The connection of expansion devices to this product may damage the product and other connected systems, and may violate safety rules and regulations regarding radio interference and electromagnetic compatibility.

Use only appropriate tools when installing this product. Using excessive force with tools may damage the product, alter its characteristics or degrade its safety.

Introduction

Iono Uno combines the ease of use of the Arduino platform with multiple input and output interfaces; the result is a rugged, safe, reliable and easy to connect module, suited for installation both in industrial and residential environments.

Iono Uno is compatible with all Arduino boards compliant with the Arduino 1.0 pinout and form-factor, like Arduino Uno, Arduino Leonardo, Arduino Uno WiFi, Arduino Yún, and many other.

Features

The Iono Uno modules key features are:

- 12÷24Vdc power supply
- compatible with 5.0V and 3.3V operating voltage Arduino boards with 1.0 pinout
- 4 multi-mode inputs: either to be used as digital or as 0÷10V or 0÷20mA analog signals
- 2 digital inputs for potential-free contacts
- 1 analog output 0÷10V controlled by PWM signal
- redundancy of common terminals for simplified wiring
- 6 power relay outputs rated for 12A at 250V, which can tolerate large peak currents (inrush current) up to 80A
- output relays with bistable coil, to minimize the current consumption
- standard RS-485 interfaces to the Arduino serial pins with automatic TX/RX switching, and electrostatic discharge protection
- built-in slot for the installation of an Arduino board
- removable terminal blocks for easier installation
- inputs protected against electrostatic discharges and temporary over voltages
- reinforced internal insulation between high voltage areas (relay outputs) and all other components
- standard modular housing 9 units size, suitable for mounting on Omega rail.

Usage and connections

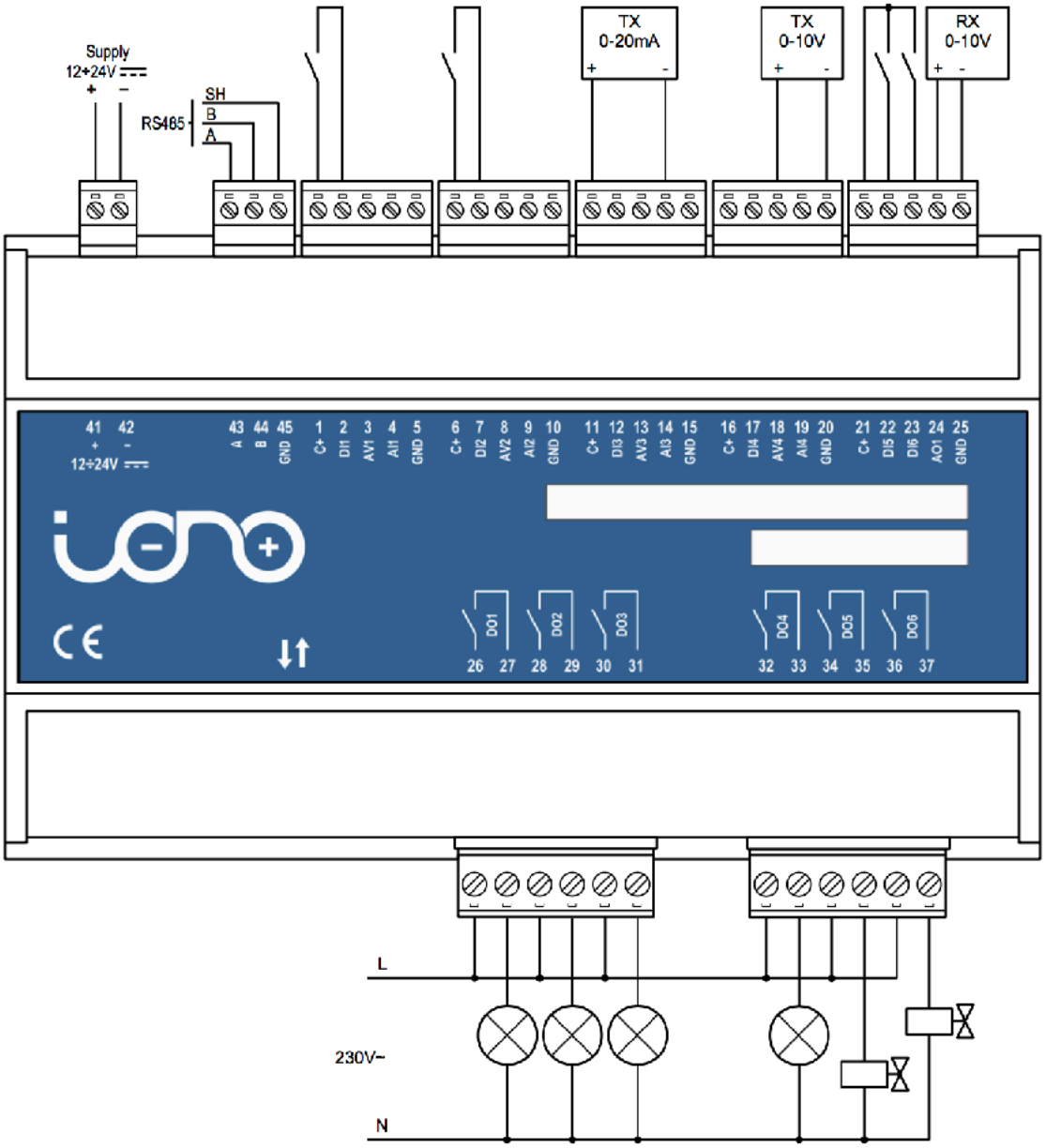

CONNECTION EXAMPLE

Device identification

The device can be identified with the information provided in the rating and identification plate, permanently attached to the side of the case.

EXAMPLE RATING AND IDENTIFICATION PLATE

Power supply

Iono Uno can be powered with DC voltage only:

✓ DC: nominal voltage in the range 12 V to 24 V (MIN=11 Vdc, MAX=30 Vdc)

Respect the correct polarity shown in the schematic diagram (+ -). The power supply circuit implements reverse polarity protection using an auto resetting fuse and surge protection up to ±500V/2ohms 1.2/50µs.

Multi-mode inputs

Iono Uno features 4 multi-mode inputs (1, 2, 3, 4). Depending on terminal blocks wiring, digital (ON-OFF), analog 0÷10V or analog 0÷20mA signals can be applied.

Analog mode

When using analog inputs, 0÷10V and 0÷20mA are converted to 0÷3.3V levels in order to be compatible with the Arduino platform input pins. Both active and passive 0÷20mA (or 4÷20mA) transmitters can be connected, using the C+ terminal as power supply; the 0÷20mA transmitter shown in the schematic here below is a 2-wire passive type.

Digital mode

In digital mode, an external potential free contact can be connected between terminals C+ and DI1-DI4; otherwise, the DIx terminal can be connected to an external voltage signal (in the range 0÷40V) referred to the GND of the Iono Uno module. Refer to the Technical specifications table for the voltage thresholds for high and low states.

DI5 and DI6 digital inputs

An external potential free contact can be connected between terminals C+ and DI5-DI6; otherwise, the DIx terminal can be connected to an external voltage signal (in the range 0÷40V) referred to the GND of the Iono Uno module. Refer to the Technical specifications table for the voltage thresholds for high and low states.

DI5 and DI6 are connected to the Arduino board through a protection network. If you need to bypass the protection network to use DI5 and DI6 as general-purpose input/output lines (e.g. for I2C, 1-Wire or Wiegand communication), you can move jumpers J1 (DI6) and J2 (DI5) to the BYP position.

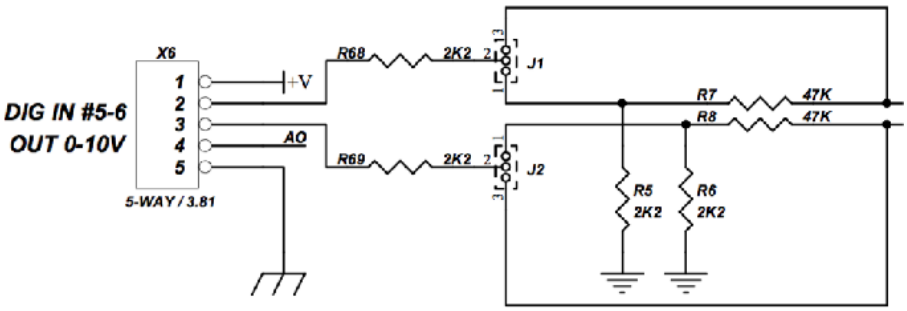

DI5-DI6 JUMPERS SCHEMATIC

NOTICE

Note that, with the jumpers in the BYP position, you should limit the maximum voltage applied to DI5 or DI6 to the voltage levels accepted by the Arduino board installed in Iono Uno. Exceeding the Arduino voltage range will result in damage to the Arduino board and Iono Uno.

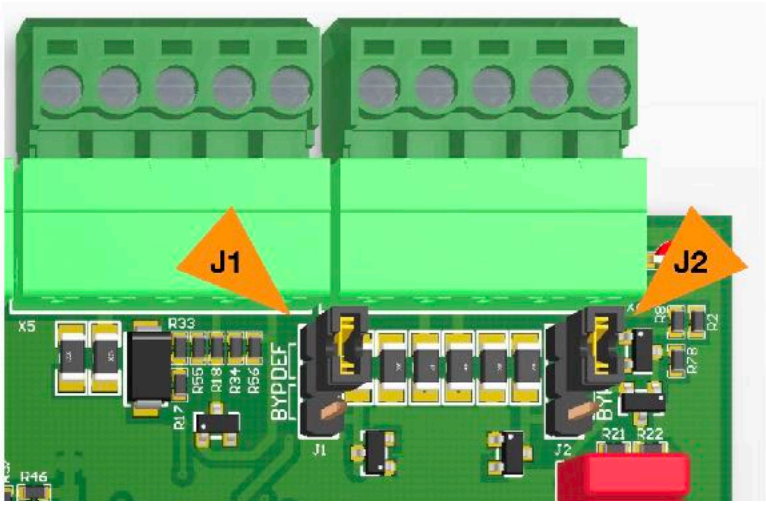

J1-J2 JUMPERS POSITION

Analog output

Iono Uno features a 0÷10V output (AO1) which can be controlled by the PWM function of the Arduino platform; the 0÷100% duty cycle of PWM signal corresponds to a 0÷10V output voltage.

This is a sink/source output (the current direction at this output can be both positive and negative).

Relay digital outputs

Iono Uno features 6 power relay outputs which can withstand high inrush currents thanks to the special contact built.

These relays have bistable coils, which are powered only for the short time needed to move the contact from one position to the other one.

This guarantees very low total current consumption and low power dissipation resulting in lower self-heating. It also maintains ”mechanical memory” in case of module power supply failure.

A dedicated internal circuit manages the relay coils, matching the closed status of each relay to the high state of the related control pin of the Arduino platform.

RS-485 serial port

Iono Uno uses the Arduino UART TX/RX pins to implement a standard RS-485 serial port.

Simply connect the RS-485 A, B and GND to the RS-485 pins of the terminal block.

The RS-485 port is protected from ESD and voltage surges, and supports half-duplex communication with automatic TX/RX switching from 1200 to 115200 bps.

The RS-485 TX/RX switching is implemented automatically in the Iono’s micro-controller, based on speed and number of bits detection, and is completely transparent to the software controlling the UART on Arduino.

The RS-485 line has 620 Ohm pull-up and pull-down resistors on lines A and B. The biasing resistors ensure that, during idle periods the data lines are kept at a stable voltage level and prevent false triggering of receiver input. These resistors can be enabled installing jumpers J4 and J5 respectively.

A 120 Ohm termination resistor between A and B can be enabled installing jumper J3.

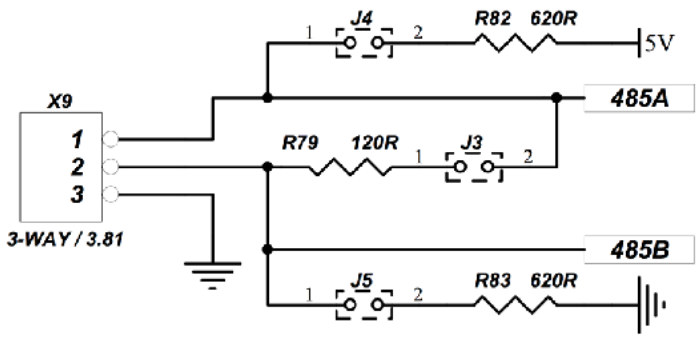

RS-485 JUMPERS SCHEMATIC

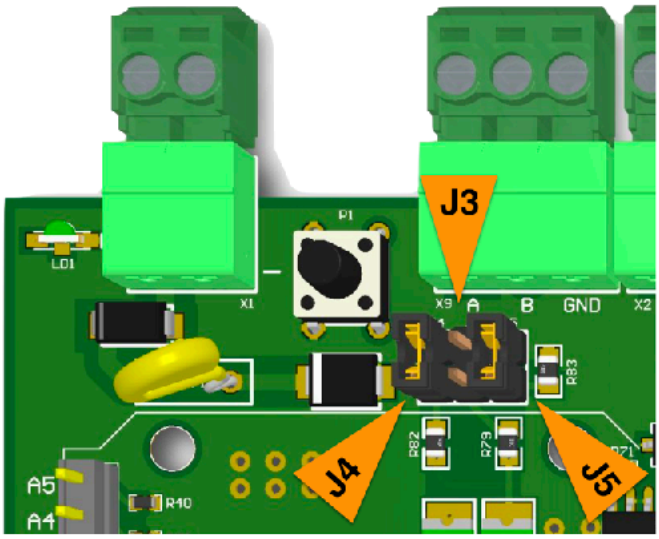

RS-485 JUMPERS POSITION

Mapping

The following table shows the mapping of the inputs and outputs of the Iono Uno module into the related pins of the Arduino platform.

Iono Uno inputs and outputs	Arduino pins
DI1 – AV1 – AI1	A0
DI2 – AV2 – AI2	A1
DI3 – AV3 – AI3	A2
DI4 – AV4 – AI4	A3
DI5	2
DI6	3
DO1	A4
DO2	A5
DO3	5
DO4	6
DO5	7
DO6	8
AO1	9
RS-485	RX (0) / TX (1)

Working with 5.0V and 3.3V boards

Iono Uno is compatible with both 5.0V and 3.3V operating voltage Arduino boards.

All digital I/O and the PWM-based analog output A01 work transparently with both 5.0V and 3.3V Arduino pins

The 0-10V and 0-20mA analog inputs are translated to a voltage range between 0 and 3.3V to the analog pins of the Arduino boards. If you are using a board with 5.0V operating voltage, you will have to use the external voltage reference (AREF) for the Arduino analog-to-digital converter. The Iono Uno board connects the Arduino AREF pin to 3.3V. If you are using an Arduino board in a way that is incompatible with the 3.3V voltage applied to AREF, you can move the J6 jumper to the “OPEN” position in order to leave the AREF pin unconnected.

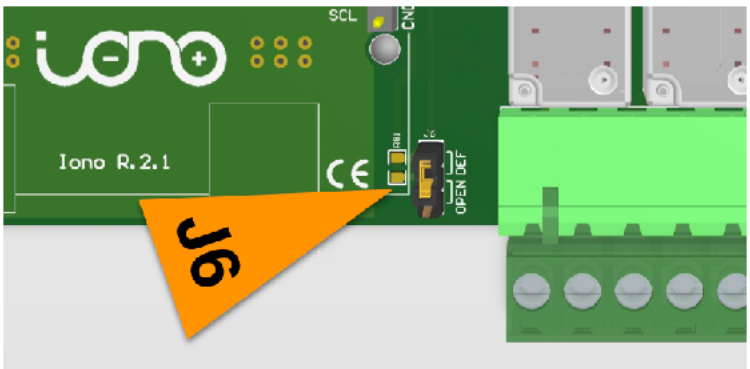

AREF JUMPER POSITION

Hardware Installation

NOTICE

Before opening the Iono Uno case, disconnect all power sources and any connection to external devices.

NOTICE

Static electricity can damage the components in your system. To protect your system's components from static damage during the installation process, touch any of the unpainted metal surfaces on your computer's frame or wear an ESD wrist strap before handling internal components. Either method will safely discharge static electricity that's naturally present in your body.

When handling the Arduino board, be sure to hold it along the side edges using your thumb and index finger. Avoid touching the components and pin connectors as damage can occur.

To install the Arduino board in the Iono Uno module or to program some versions of Arduino (e.g. Arduino Ethernet) or to change the configuration of internal jumpers, you need to open the plastic DIN rail case removing the two side covers, by sliding them upwards.

REMOVING THE SIDE COVERS

The turrets next to the pins should fit in the corresponding holes on your board. You may want to remove the turrets if they don't fit your board. It is up to you to determine if the mechanical coupling between Iono Uno and the Arduino board is appropriate for your application.

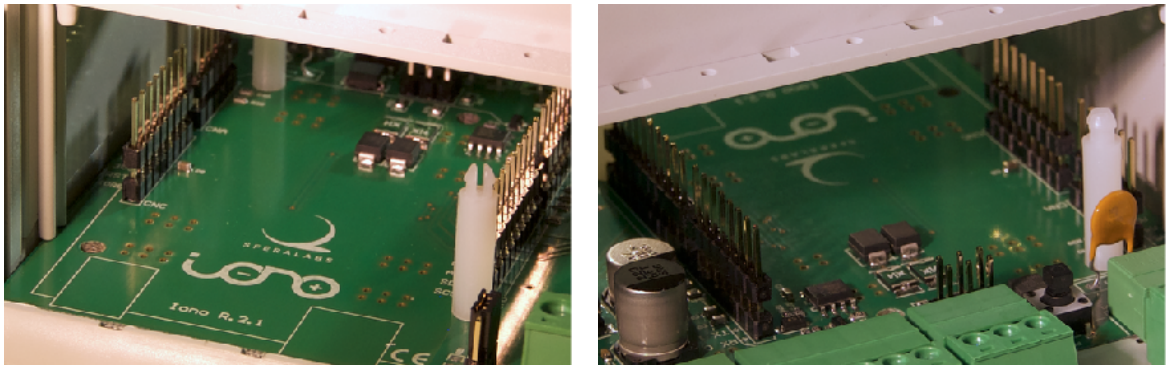

TURRETS INSTALLED ON THE IONO UNO BOARD

To install the Arduino board, first line-up the connectors pins on both sides and also the Arduino board holes with the turrets heads. Visually confirm the alignment, then gently push down on both sides at the same time to lock the board firmly in place.

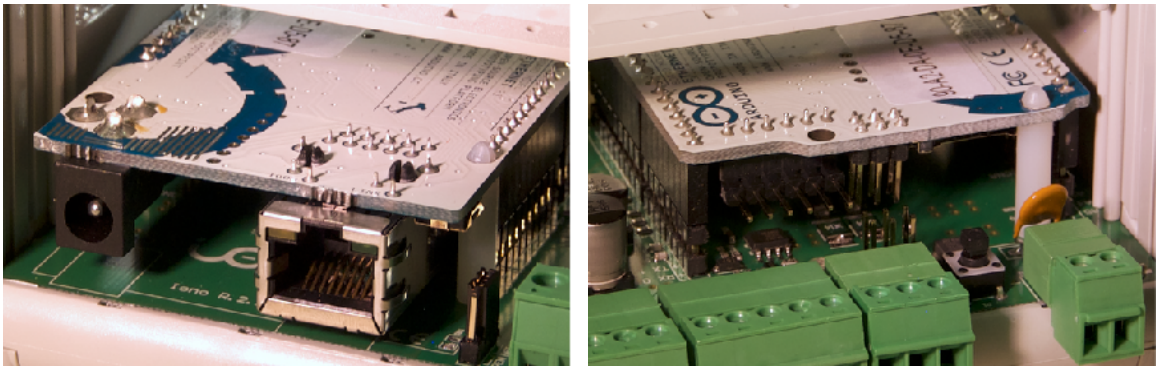

AN ARDUINO BOARD WITH PINS AND TURRETS PROPERLY ALIGNED

To remove the board, you should apply a gentle pressure to separate the turrets heads from the board. Be very careful to keep the Arduino board parallel to the Iono Uno board at all times, or you will bend the connection pins. You may consider cutting the turrets to simplify the removal of your Arduino board.

Iono Uno Software Development

Since Iono Uno is just a super-sized I/O shield for a standard Arduino, you don't need any specific library to work on it.

Our libraries and examples, available with source code on GitHub, will provide you with some handy utilities to speed up your development, including functionalities to monitor the inputs (filtering out possible noise) and control the outputs, HTTP APIs, Modbus support and much more.

Go to **https://github.com/sfera-labs/iono/wiki** to access the code and documentation.

Programming

Arduino Uno

The Arduino Uno board, when mounted into a Iono Uno module, must be programmed through the USB port.

Arduino Ethernet

The Arduino Ethernet board requires the "USB Serial Light Adapter" for programming, as shown below.

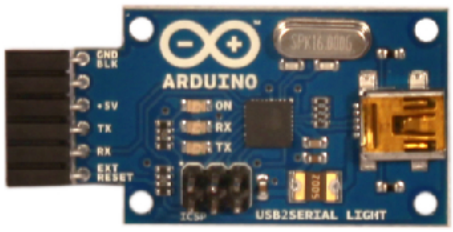

THE USB SERIAL ADAPTER

In order to access the programming connector inside the Iono Uno module, the cover placed on the same side of the power supply terminal block must be removed, gently sliding it outward, and giving access to the programming connector indicated by the red arrow. The yellow arrow indicates the reset button of the Arduino board.

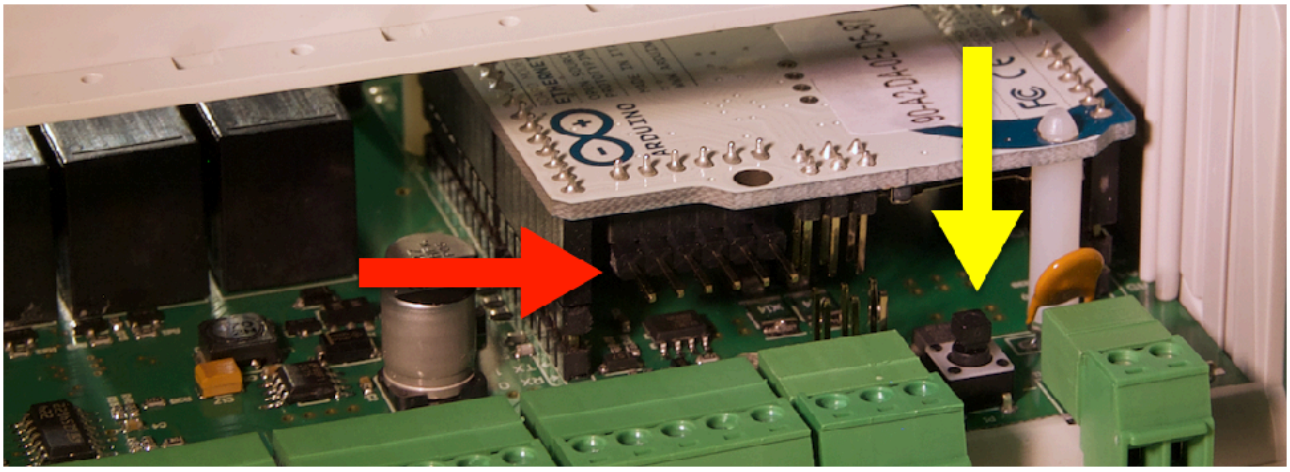

USB ADAPTER CONNECTOR AND RESET BUTTON

Insert the USB Serial Adapter as shown below, with the components side facing down.

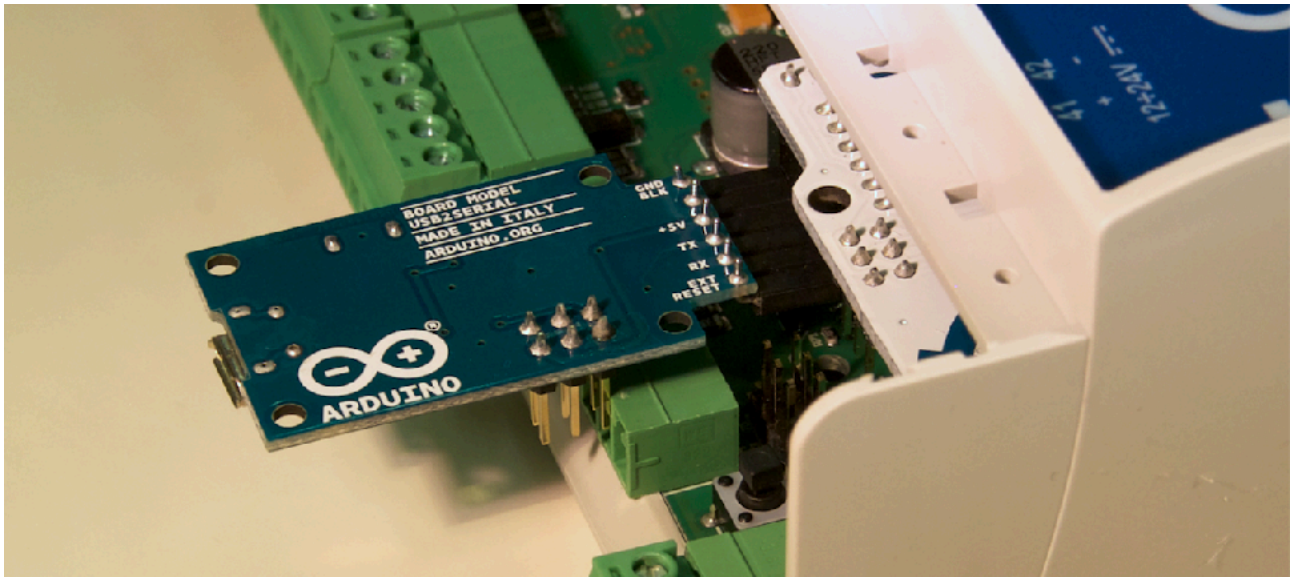

SERIAL ADAPTER CONNECTED TO THE ARDUINO BOARD

Connect the adapter to a PC and perform the programming as usual. This operation does not require the Iono Uno module to be connected to a power supply.

Block diagram

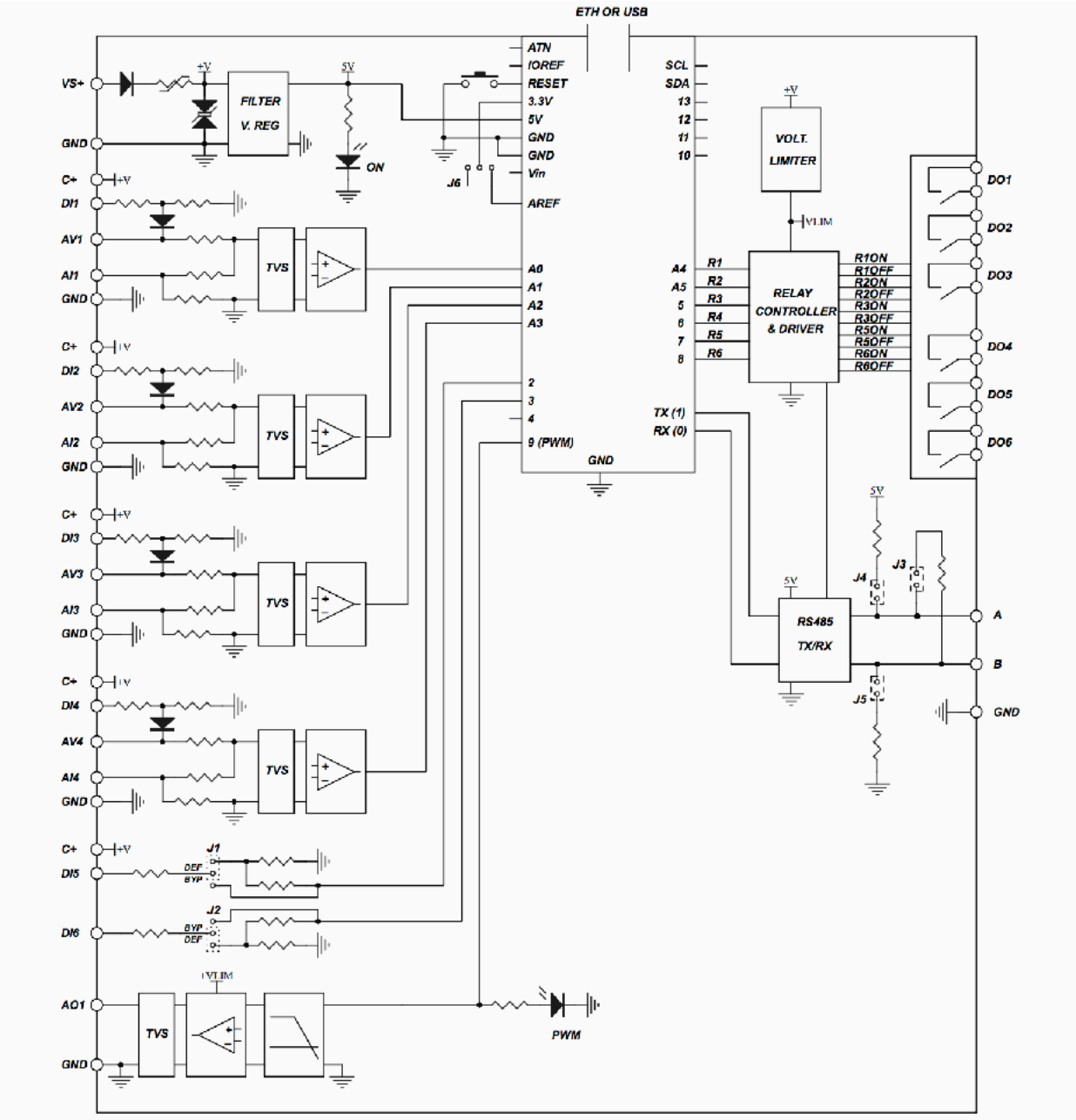

BLOCK DIAGRAM

Board layout

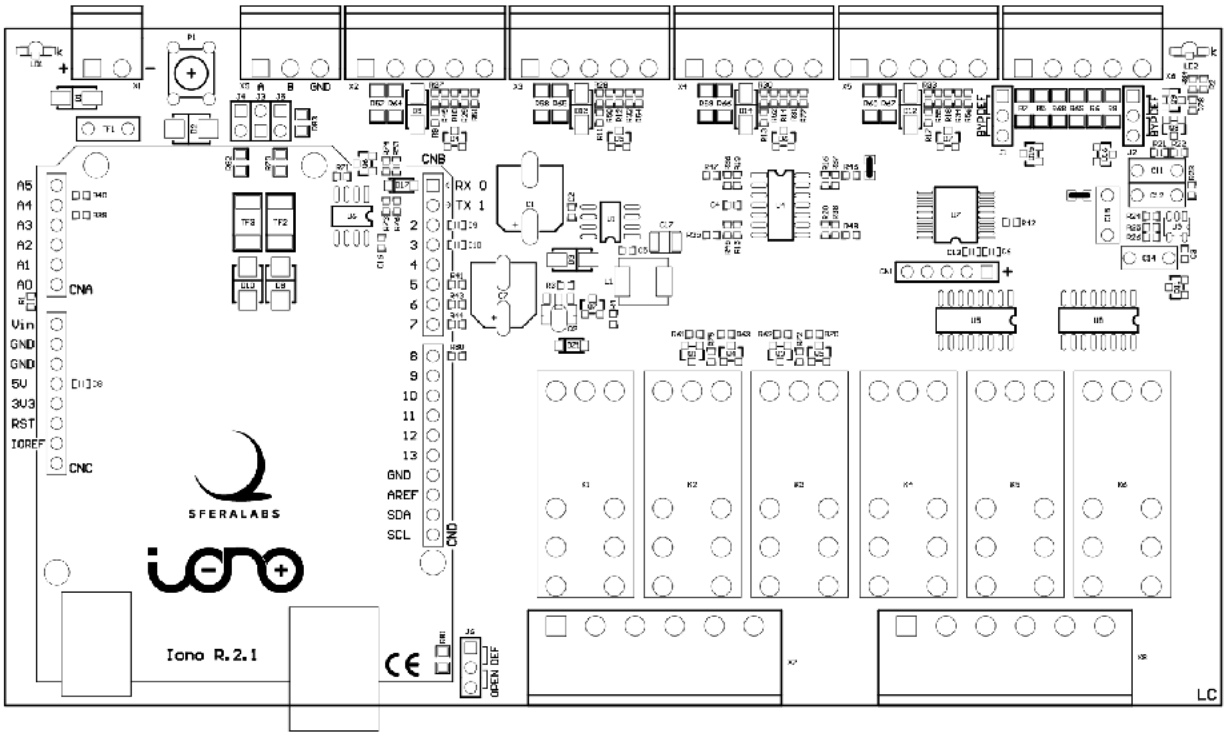

BOARD LAYOUT

Technical specifications

Power supply	12…24 V⎓ nom. (11…30 V⎓) Reverse polarity and surge protection up to ±500 V / 2 ohms 1.2 / 50 µs using an auto resetting fuse and diodes
Current consumption at VS+ 12V⎓ and unconnected inputs	13 mA w/o Arduino 35 mA with Arduino Uno 95 mA with Arduino Ethernet
Current consumption at VS+ 12V⎓ and digital inputs closed to C+	30 mA w/o Arduino 55 mA with Arduino Uno 115 mA with Arduino Ethernet
Current consumption at VS+ 24V⎓ and unconnected inputs	11 mA w/o Arduino 22 mA with Arduino Uno 52 mA with Arduino Ethernet
Current consumption at VS+ 24V⎓ and digital inputs closed to C+	45 mA w/o Arduino 56 mA with Arduino Uno 86 mA with Arduino Ethernet
Arduino platform compatibility	UNO, UNO WiFi Rev2, Ethernet, Zero, Leonardo, Leonardo Ethernet, Yún, UNO R4 Minima, UNO R4 WiFi
Inputs	4 multi-mode (digital or analog 0…10V or 4…20mA) 2 digital
Voltage range at digital inputs (1-6)	0…40 V⎓
Current for each digital input (1-6)	2,7 mA at VS+ 12 V⎓ 5,5 mA at VS+ 24 V⎓
Voltage threshold digital inputs 1-4 (typ.)	VIH: 7.3 V VIL: 6.5 V
Voltage threshold digital inputs 5-6 (typ.)	VIH: 4.8 V VIL: 4.7 V
Impedance for analog 0…10V inputs (1-4)	143 kΩ
Impedance for analog 0…20mA inputs (1-4)	165 Ω
Conversion error for analog 0…10V inputs (1-4)	2% of full scale
Conversion error for analog 0…20mA inputs (1-4)	2% of full scale
Max cable length for digital inputs (1-6)	30 meters
Max cable length for analog inputs (1-4)	15 meters
Digital outputs	6 power relays with bistable coil

MAX output contact rating (each output)	Resistive load (cos ϕ = 1): 12 A at 250 V~ (3000 VA) Inductive load (cos ϕ = 0.5): 3.6 A at 250 V~ (900 VA) Incandescent lamps: 8 A at 250 V~ (2000 VA) Fluorescent lamps: 350 W with 42 uF MAX power factor correction capacitor Resistive load (DC): 12 A at 24 Vdc / 1 A at 60 Vdc
Analog output	0…10 V PWM controlled by Arduino PWM out max 10 mA source/sink current
Suggested minimum PWM frequency for analog output	120 Hz
Duty cycle to voltage error for analog output	2% of full scale
Communication ports	RS-485 half-duplex with automatic data direction management
Baud Rates on COMM ports	1200 to 115200
ESD-Protection Voltage on RS-485 A/B	±15 kV human body model ±8 kV contact discharge
Surge protection on RS-485 A/B	Surge protection up to ±500 V / 2 ohms 1.2 / 50 µs; 600 W peak pulse power capability at 10/1000 µs waveform
Fail safe feature on RS-485	Yes
Housing	standard 9M for DIN rail
Operating temperature	0…+50 °C
Storage temperature	-20…+70 °C
Protection degree	IP20
Weight	275 g (Iono Uno) 295 g (Iono Uno + Arduino Uno) 300 g (Iono Uno + Arduino Ethernet)

Dimensions

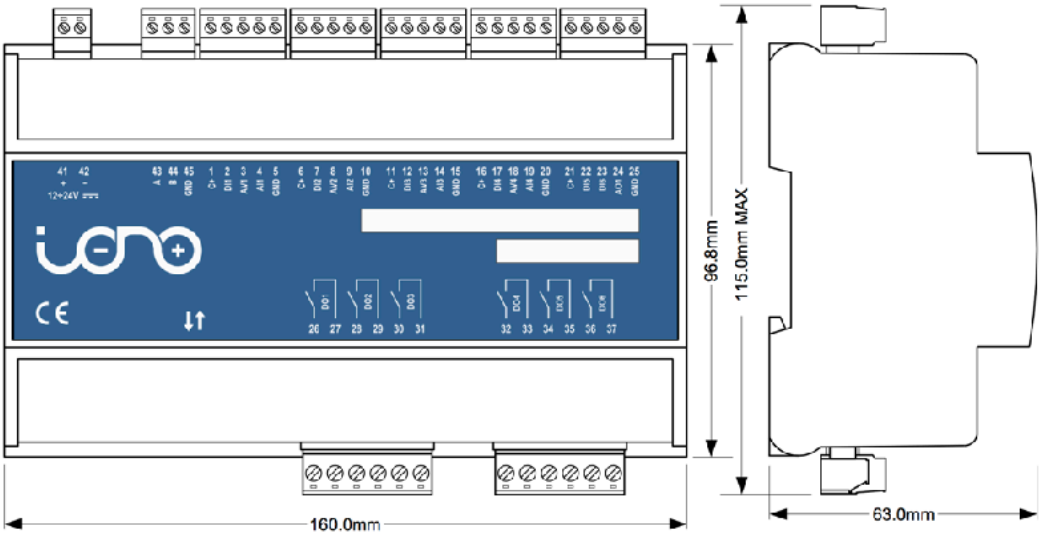

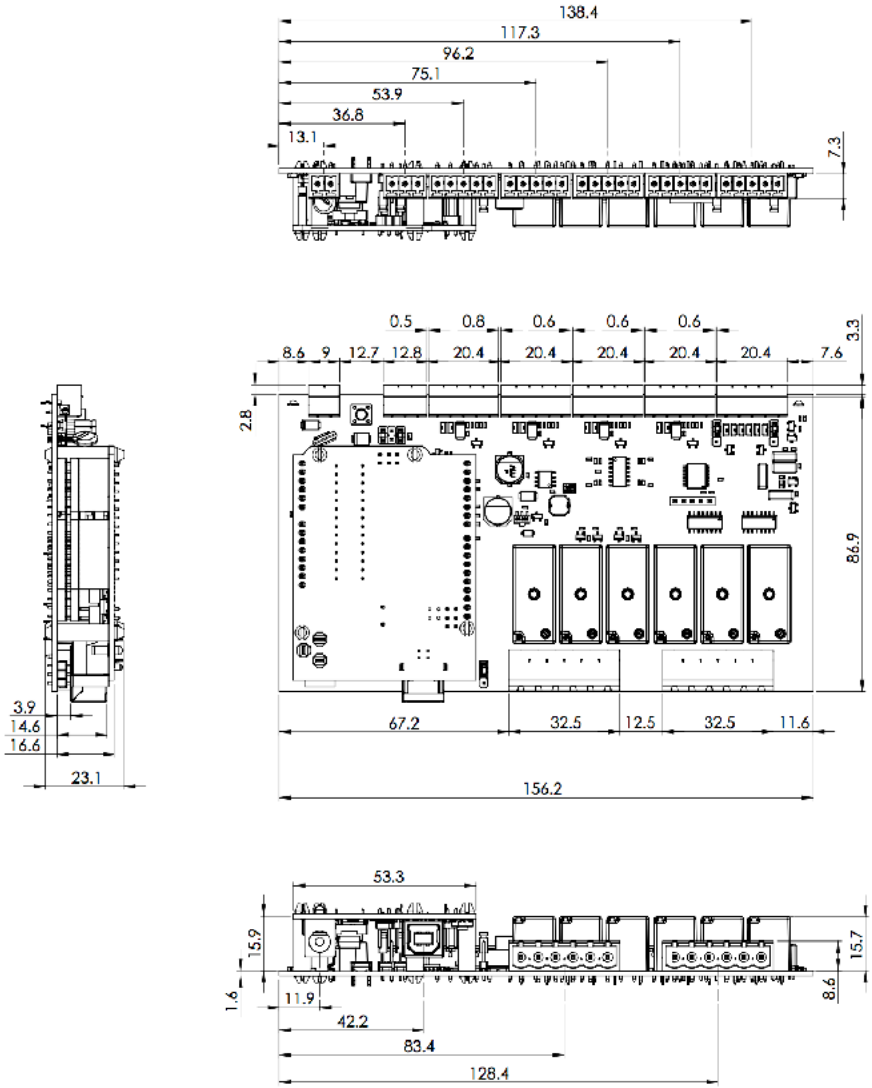

DIMENSIONS

Disposal

(Waste Electrical & Electronic Equipment)

(Applicable in the European Union and other European countries with separate collection systems). This marking on the product, accessories or literature indicates that the product should not be disposed of with other household waste at the end of their working life. To prevent possible harm to the environment or human health from uncontrolled waste disposal, please separate these items from other types of waste and recycle them responsibly to promote the sustainable reuse of material resources. Household users should contact either the retailer where they purchased this product, or their local government office, for details of where and how they can take these items for environmentally safe recycling. This product and its electronic accessories should not be mixed with other commercial wastes for disposal.

Installation and use restrictions

Standards and regulations

The design and the setting up of electrical systems must be performed according to the relevant standards, guidelines, specifications and regulations of the relevant country. The installation, configuration and programming of the devices must be carried out by trained personnel.

The installation and wiring of connected devices must be performed according to the recommendations of the manufacturers (reported on the specific data sheet of the product) and according to the applicable standards.

All the relevant safety regulations, e.g. accident prevention regulations, law on technical work equipment, must also be observed.

Safety instructions

Carefully read the safety information section at the beginning of this document.

Set-up

For the first installation of the device proceed according to the following procedure:

- make sure all power supplies are disconnected
- install and wire the device according to the schematic diagrams on the specific data sheet of the product
- after completing the previous steps, switch on the 230 Vac supplying the power supply and the other related circuits.

Conformity Information

EU

This device complies with the essential requirements of the following directives and harmonised standards:

- 2014/35/EU (Low Voltage)
- 2014/30/EU (EMC)
- EN61000-6-2:2005 (EMC Immunity)
- EN60664-1:2007 (Electrical safety)
- EN61000-6-3:2007 (Emission for residential, commercial and light-industrial environments)
- 2011/65/EU and 2015/863/EU (RoHS)

The declaration of conformity is available on the internet at: https://www.sferalabs.cc/