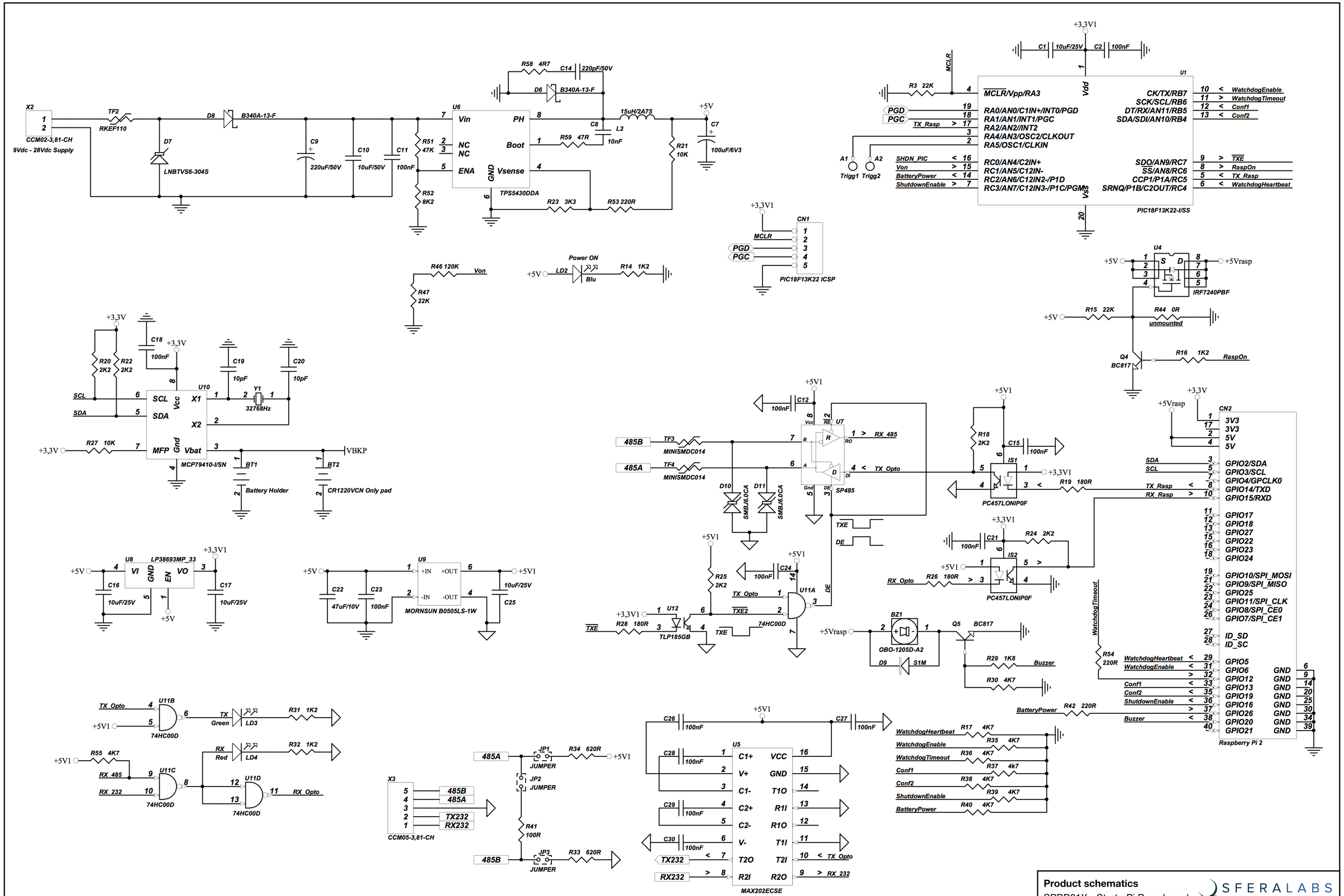

Product schematics

SPBB21X - Strato Pi Base board
SPMB21X - Strato Pi Base server

SFERALABS

© 2015-2017 Sfera Labs S.r.l.