Strato Pi Base User Guide

April 2024

Revision 029

SPBB30X *Strato Pi Base board*

SPMB30X *Strato Pi Base server with Raspberry Pi 3 Model B*

SPMB30XP *Strato Pi Base server with Raspberry Pi 3 Model B+*

SPMB30X41 *Strato Pi Base server with Raspberry Pi 4 Model B 1GB*

SPMB30X42 *Strato Pi Base server with Raspberry Pi 4 Model B 2GB*

SPMB30X44 *Strato Pi Base server with Raspberry Pi 4 Model B 4GB*

SPMB30X48 *Strato Pi Base server with Raspberry Pi 4 Model B 8GB*

Note*: part numbers with* ***T*** *instead of* ***X*** *do not have the ATECC608 secure element*

SFERALABS

Safety information 4
- Qualified personnel 4
- Hazard levels 4
- Safety instructions 5
  - General safety instructions 5
  - Battery 5

Introduction 7

Features 8

Usage and connections 9
- Device identification 9
- Hardware Installation 10
  - Strato Pi Base board 10
  - Strato Pi Base server 10
- Replacing the RTC backup battery 10
- Terminal block 12
- Power supply 13
- Dedicated GPIO pins 15

Software installation and configuration 16
- Installing the Strato Pi kernel module 16
- Installing the Real Time Clock software 16
- Testing the Real Time Clock 17
- Configuring the serial port 18

Using Strato Pi Base 19
- Real Time Clock 19
- Secure element 19
- Serial port 19
- Buzzer 21
- Hardware watchdog 21
- Power cycle 21
- Advanced configuration 21

Thermal considerations for Strato Pi Base server 22

Block diagram 25

Technical specifications 26

Dimensions 28

Disposal 29

Installation and use restrictions 29

Standards and regulations 29
Safety instructions 29
Set-up 29
Conformity Information 30
EU 30
USA 30
CANADA 31
RCM AUSTRALIA / NEW ZEALAND 31
Compliance information for Raspberry Pi 31
EU 31
USA 31
CANADA 31

Be sure to always remove the power supply before connecting or disconnecting the Strato Pi Base board to Raspberry Pi.

Follow all applicable electrical safety standards, guidelines, specifications and regulations for installation, wiring and operations of Strato Pi Base.

Carefully and fully read this Strato Pi Base user guide before installation.

Strato Pi Base is not authorised for use in safety-critical applications where a failure of the product would reasonably be expected to cause personal injury or death. Safety-critical applications include, without limitation, life support devices and systems, equipment or systems for the operation of nuclear facilities and weapons systems. Strato is neither designed nor intended for use in critical military or aerospace applications or environments and for automotive applications or environment. Customer acknowledges and agrees that any such use of Strato Pi Base is solely at Customer's risk, and that Customer is solely responsible for compliance with all legal and regulatory requirements in connection with such use.

Sfera Labs S.r.l. may make changes to specifications and product descriptions at any time, without notice. The product information on the web site or materials is subject to change without notice.

Please download and read the Sfera Labs Terms and Conditions document available at:

http://www.sferalabs.cc

Strato and Sfera Labs are trademarks of Sfera Labs S.r.l. Other brands and names may be claimed as the property of others.

Copyright © 2015-2021 Sfera Labs S.r.l. All rights reserved.

Safety information

Carefully and fully read this user guide before installation and retain it for future reference.

Qualified personnel

The product described in this manual must be operated only by personnel qualified for the specific task and installation environment, in accordance with all relevant documentation and safety instructions. A qualified person should be capable of fully identifying all installation and operation risks and avoid potential hazards when working with this product.

Hazard levels

This manual contains information you must observe to ensure your personal safety and prevent damage to property. Safety information in this manual are highlighted by the safety symbols below, graded according to the degree of danger.

DANGER

Indicates a hazardous situation which, if not avoided, **will** result in death or serious personal injury.

WARNING

Indicates a hazardous situation which, if not avoided, **may** result in death or serious personal injury.

CAUTION

Indicates a hazardous situation which, if not avoided, can result in minor or moderate personal injury.

NOTICE

Indicates a situation which, if not avoided, can result in damage of property.

Safety instructions

General safety instructions

Protect the unit against moisture, dirt and any kind of damage during transport, storage and operation. Do not operate the unit outside the specified technical data.

Never open the housing. If not otherwise specified, install in closed housing (e.g. distribution cabinet). Earth the unit at the terminals provided, if existing, for this purpose. Do not obstruct cooling of the unit. Keep out of the reach of children.

WARNING

Life threatening voltages are present within and around an open control cabinet.

When installing this product in a control cabinet or any other areas where dangerous voltages are present, always switch off the power supply to the cabinet or equipment.

WARNING

Risk of fire if not installed and operated properly.

Follow all applicable electrical safety standards, guidelines, specifications and regulations for installation, wiring and operations of this product.

The Raspberry Pi board could generate a substantial amount of heat when the software forces the CPU and/or GPU to operate at high load levels. Ensure that the product is properly installed and ventilated to prevent overheat.

NOTICE

The connection of expansion devices to this product may damage the product and other connected systems, and may violate safety rules and regulations regarding radio interference and electromagnetic compatibility.

Use only appropriate tools when installing this product. Using excessive force with tools may damage the product, alter its characteristics or degrade its safety.

Battery

This product uses a small lithium non-rechargeable battery to power its internal real time clock (RTC).

WARNING

Improper handling of lithium and lead-acid batteries can result in an explosion of the batteries and/or release of harmful substances.

Worn-out or defective batteries can compromise the function of this product.

Replace the RTC lithium battery before it is completely discharged. The lithium battery must be replaced only with an identical battery. See the "Replacing the RTC backup battery" section for instructions.

Do not throw lithium batteries into fire, do not solder on the cell body, do not recharge, do not open, do not short-circuit, do not reverse polarity, do not heat above 100°C and protect from direct sunlight, moisture and condensation.

Dispose of used batteries according to local regulations and the battery manufacturer's instructions.

Introduction

Strato Pi Base enhances the Raspberry Pi Model B version 2, 3 and 4 with several hardware features to make it suitable for use in professional applications where reliability and service continuity are key requirements.

Strato Pi Base is available as a bare board or fully assembled unit, including a Raspberry Pi 3 Model B or B+ or Raspberry Pi 4 Model B, in a standard DIN-rail case. The assembled unit is also available with the SPBF10X Strato Pi Fan active cooling option.

The information contained in this manual covers all versions, except where explicitly stated otherwise. The bare board is called “Strato Pi Base board”, while the assembled unit is “Strato Pi Base server”.

STRATO PI BASE WITH RASPBERRY PI 3 MODEL B+

STRATO PI BASE WITH RASPBERRY PI 4 MODEL B

Features

Strato Pi Base board and server:

- ✓ 9-28Vdc power supply, with surge and reverse polarity protection, and 2.2A resettable fuse
- ✓ up to 4.0A max current to the 5V Raspberry Pi power supply input pins (at 24Vdc)
- ✓ real time clock with replaceable CR1025 Lithium / Manganese Dioxide back-up battery
- ✓ standard RS-232 and RS-485 interfaces to the Raspberry Pi serial line, with opto-isolator and electrostatic discharge protection.
- ✓ on-board buzzer, connected to a GPIO pin of the Raspberry Pi board, for acoustic feedback
- ✓ hardware watchdog implemented in the Strato Pi board, fully independent from the Raspberry Pi, controlled via the GPIO pins of the Raspberry Pi board
- ✓ integrated boot loader for the Strato Pi micro-controller, allowing in-field firmware upgrades directly from the Raspberry Pi
- ✓ optional embedded Microchip ATECC608 secure element chip
- ✓ power supply and serial connections on a screw terminal block
- ✓ on-board LEDs for power supply and serial line activity.

Strato Pi Base server only:

- ✓ pre-assembled and tested Raspberry Pi 3 Model B or B+ or Raspberry Pi 4 Model B with Strato Pi board in a standard 4 modules DIN rail case
- ✓ optional pre-assembled SPBF10X Strato Pi Fan active cooling temperature controlled high performance fan
- ✓ side access to HDMI and 3.5mm jack for audio and composite video
- ✓ access to all USB ports and Ethernet port (opposite to the power and serial terminal block).

Usage and connections

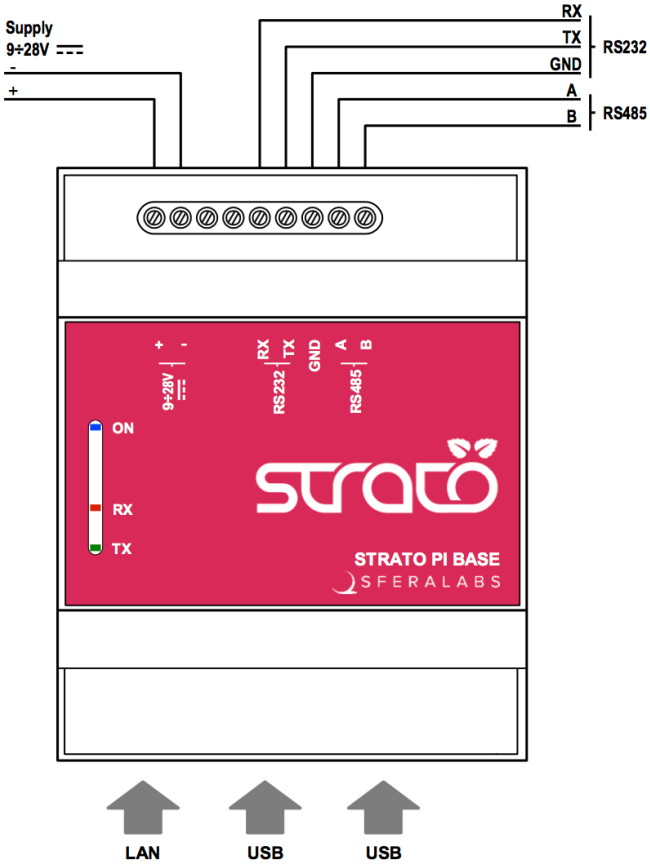

STRATO PI BASE CONNECTION DIAGRAM

Device identification

The device can be identified with the information provided in the rating and identification plate, permanently attached to the side of the case.

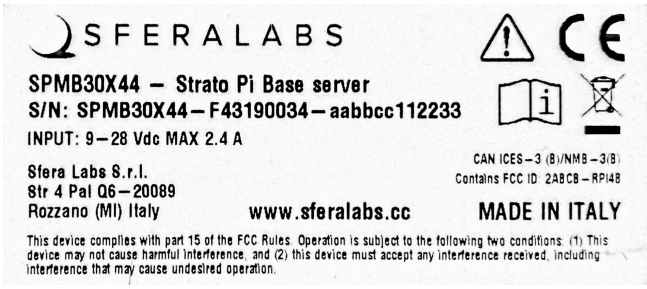

EXAMPLE RATING AND IDENTIFICATION PLATE

Hardware Installation

Strato Pi Base board

The Strato Pi Base board is supplied with all connectors pre-installed. No soldering is required. You should connect Strato Pi to Raspberry Pi through the GPIO connector. Use appropriate turrets/spacers to firmly bolt the two boards together, ensuring that no conductive part of one board touches any part of the other board.

Be particularly careful to ensure there is enough clearance between the Ethernet and USB connectors and the bottom of Strato Pi's circuit board.

NOTICE

The GPIO connector of the Strato Pi Base board must be perfectly aligned to the Raspberry Pi's GPIO pins. Turning on the Raspberry Pi and/or the Strato Pi Base board with the GPIO not correctly connected will damage both the Raspberry Pi and Strato Pi Base.

Strato Pi Base server

The Strato Pi Base server comes pre-assembled with a Raspberry Pi 3 Model B or B+ or Raspberry Pi 4 Model B board, in a plastic standard DIN-rail case.

There is no need to open the case, unless a change in the RS-485 termination resistors is required (see below).

The Micro SD card (not provided) can be inserted through a small opening on the side of the case. Use a small pen or paper clip to gently push the card in its slot.

Replacing the RTC backup battery

Strato Pi Base has a hardware real time clock with a dedicated long-life non-rechargeable back-up battery.

Strato Pi Base is shipped with a **CR1025** Lithium / Manganese Dioxide (Li/MnO2) battery installed.

The battery is only used to power the RTC chip when the main power is not available (when the Raspberry Pi is off). Depending on operating conditions it should last up to two years if the Strato Pi board is not powered, more if the Strato Pi Base receives external power.

WARNING

Improper handling of lithium batteries can result in an explosion of the batteries and/or release of harmful substances.

Worn-out or defective batteries can compromise the function of this product.

KEEP OUT OF REACH OF CHILDREN. Swallowing may lead to serious injury or death in as little as 2 hours due to chemical burns and potential perforation of the esophagus. Immediately see doctor.

Replace the RTC lithium battery before it is completely discharged. Replace the battery every 5 years even if the battery is still working properly. The lithium battery must be replaced only with an identical **CR1025** Lithium / Manganese Dioxide (Li/MnO2) battery.

Do not throw lithium batteries into fire, do not solder on the cell body, do not recharge, do not open, do not short-circuit, do not reverse polarity, do not heat above 100°C and protect from direct sunlight, moisture and condensation.

Dispose of used batteries according to local regulations and the battery manufacturer's instructions.

The RTC backup battery holder is soldered to the bottom layer of the circuit board, between the GPIO connectors. In the Strato Pi Base server, the battery is not accessible from the outside. You should first remove the case top body to gain access to the Strato Pi Base circuit board.

NOTICE

Before opening the Strato Pi Base case, disconnect all power sources, any connection to external devices, including USB cables.

Use a non-conductive pin or small tool to help extract the battery from its holder. Insert the new battery with a gentle push. You don't need tools to insert the battery. The battery is held into place by a spring contact.

Be sure to insert the battery so that the positive (+) terminal of the battery is in contact with the outer body of the battery holder, and the negative (-) terminal is in contact with the contact pad of the circuit board, as shown in the photo below.

Reversing the battery polarity may damage the product.

The real time clock will reset its time immediately when the RTC backup battery is disconnected.

Follow these steps, in the exact order, to open the case and replace the battery:

1. Remove the microSD card (the card will be damaged if you open the case with the card still inserted)
2. Remove the black plastic DIN rail hook
3. With a small flat screwdriver gently separate the bottom case and boards assembly from the top cover. Be careful to avoid damage to the USB ports metal frame. Units with the Raspberry Pi 4 Model B have a different arrangement of the top cover cuts around the USB and Ethernet ports. Do not flex that part to much to avoid permanent deformation of damage of the enclosure
4. Use a non-conductive pin or small tool to help extract the battery from its holder
5. Insert the new battery with a gentle push. Respect the battery polarity

6. Replace the case bottom applying a gentle pressure on the corners
7. Replace the black plastic DIN rail hook
8. Insert the microSD card.

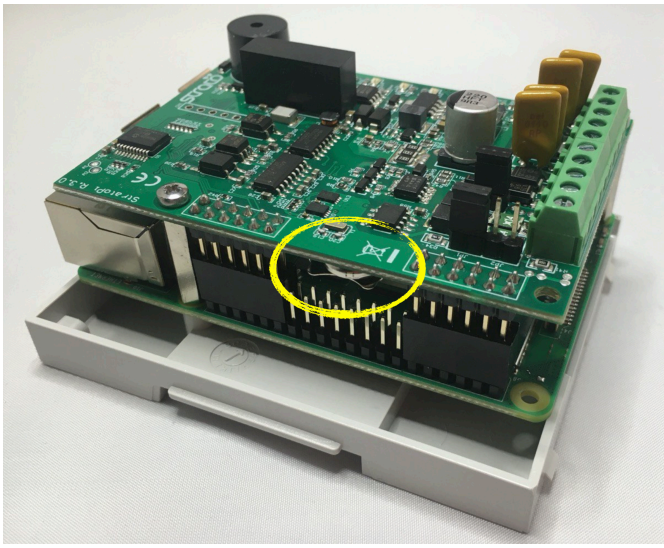

RTC BACKUP BATTERY

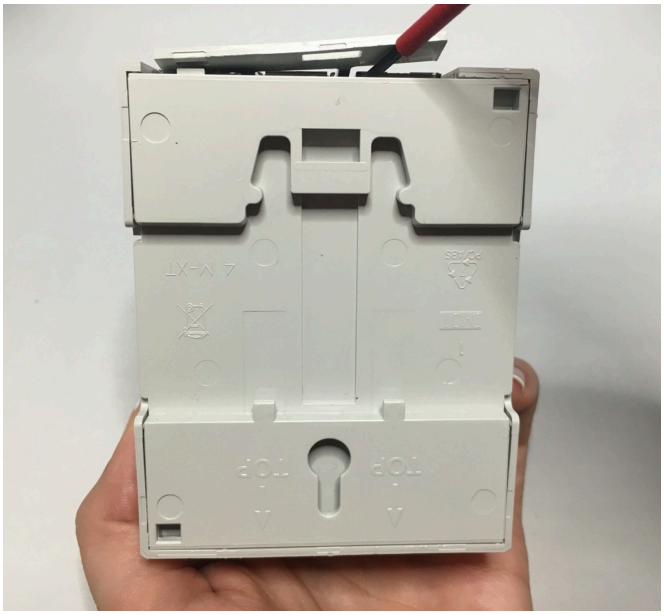

OPENING THE CASE OF RASPBERRY PI 4 MODEL B MODELS

Terminal block

Strato Pi Base has a 9 positions terminal block for power and serial connections.

The maximum conductor cross section is 1.5 mm² (16 AWG), or 0.5 mm² when using ferrules (highly recommended). Recommended stripping length is 5 mm. Screw thread is M2. Never exceed 0.25 Nm torque when tightening the screws.

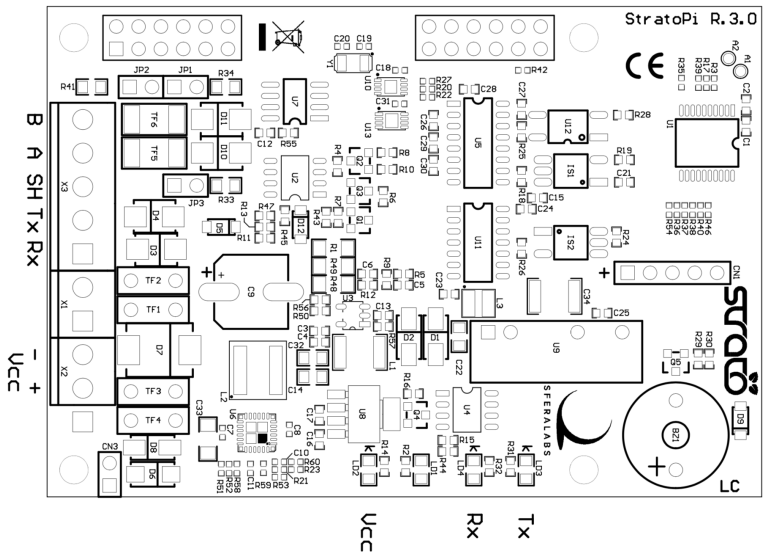

THE STRATO PI BASE CIRCUIT BOARD

Power supply

Strato Pi Base can be powered with DC voltage only:

✓ DC: nominal voltage range 9.0V to 28.0V.

Respect the correct polarity shown in the schematic diagram (+ -). The power supply circuit implements reverse polarity protection using an auto resetting fuse and surge protection up to ±1000V/2ohms 1.2/50µs.

A blue on-board LED, also visible through the front panel of the DIN-rail case, is lit when power supply is available.

When a Strato Pi Base board is used, never connect the Raspberry Pi micro-USB power plug.

The Strato Pi Base power supply stage is optimised to deliver up to 4A at 5V to the Raspberry Pi. Because Strato Pi has a 2.2A resettable fuse (polyfuse) on the power supply line, the maximum current that its regulator can deliver is also limited by this fuse, and depends on the input voltage. The following table lists the typical measured output current of the power supply stage at different input voltages and the corresponding input current.

		9V	12V	24V
Iout	**Vout**	**Iin**	**Iin**	**Iin**
0,1	5,09	0,13	0,10	0,08
1,0	5,05	0,71	0,52	0,28
1,3	5,04	0,91	0,67	0,35
1,5	5,03	1,05	0,76	0,39
1,8	5,01	1,27	0,91	0,46
2,0	5,00	1,42	1,01	0,51
2,5	4,98	1,80	1,27	0,64
2,7	4,97	1,94	1,38	0,68
2,8	4,96	FUSE	1,43	0,71
3,0	4,95		1,54	0,76
3,5	4,92		1,88	0,89
3,7	4,91		FUSE	0,94
4,0	4,90			1,02
4,2	4,88			1,08
4,3	4,85			1,10
4,4				REG

STRATO PI BASE POWER SUPPLY STAGE TYPICAL IN/OUT VOLTAGE AND CURRENT

Dedicated GPIO pins

Strato Pi uses some of the Raspberry Pi's GPIO pins. These pins should not be used for other functions.

GPIO pin	Direction	Description
GPIO2/SDA		I²C SDA line
GPIO3/SCL		I²C SCL line
GPIO14/TXD	out	serial TX line
GPIO15/RXD	in	serial RX line
GPIO5	out	cycle high/low for watchdog heartbeat
GPIO6	out	set to high to enable the watchdog
GPIO12	in	high on watchdog timeout
GPIO16	out	set to high to enable the shutdown cycle
GPIO20	out	set to high to sound the buzzer
GPIO13	out	soft serial TX for Strato MCU configuration
GPIO19	in	soft serial RX for Strato MCU configuration

Software installation and configuration

All features of Strato Pi Base are controlled via dedicated GPIO, the I²C bus and a soft serial RX/TX interface to the embedded micro-controller and can be used with most operating systems and programming languages.

The following software installation notes are based on the Raspbian operating system.

Installing the Strato Pi kernel module

The Strato Pi kernel module can be used to easily access Strato Pi's features via sysfs file system.

Refer to the following instructions to download and install the module or go to:

https://github.com/sfera-labs/strato-pi-kernel-module

for updated instructions, usage details and examples.

Download and install:

```
$ sudo apt install git raspberrypi-kernel-headers
$ git clone --depth 1 --recursive https://github.com/sfera-labs/strato-pi-kernel-module.git
$ cd strato-pi-kernel-module
$ make
$ sudo make install
$ dtc -@ -Hepapr -I dts -O dtb -o stratopi.dtbo stratopi.dts
$ sudo cp stratopi.dtbo /boot/overlays/
```

Add the following line to /boot/config.txt:

```
dtoverlay=stratopi
```

Optionally, to be able to use the sysfs files not as super user, create a new group "stratopi" and set it as the module owner group by adding an udev rule:

```
$ sudo groupadd stratopi
$ sudo cp 99-stratopi.rules /etc/udev/rules.d/
```

and add your user to the group, e.g., for user "pi":

```
$ sudo usermod -a -G stratopi pi
```

Reboot:

```
$ sudo reboot
```

You will find the directory /sys/class/stratopi/ which gives you access to Strato Pi's functionalities.

Installing the Real Time Clock software

The RTC is based on the Microchip MCP79410 module and is connected to the Raspberry Pi via its I²C serial bus.

Before downloading the installation utility, you should enable I²C and install the “i2c-tools” package.

To enable I²C, run the “raspi-config” configuration utility:

```
$ sudo raspi-config
```

Then go to “Advanced Options”, “I2C” and select “yes” to enable the I²C interface, then reboot your Raspberry Pi.

To install the “i2c-tools” package:

```
$ sudo apt-get update
$ sudo apt-get install i2c-tools
```

With these prerequisite installs completed, you should download and run Strato Pi’s installation script:

```
$ cd
$ wget http://sferalabs.cc/files/strato/rtc-install
$ chmod 755 rtc-install
$ sudo ./rtc-install
```

If the script completes with no errors, delete the installation script and reboot:

```
$ rm rtc-install
$ sudo reboot
```

Testing the Real Time Clock

Assuming you are connected to the Internet and your Pi was able to reach a public NTP (Network Time Protocol) server, you should see the current date and time using the “date” command:

```
$ date
Thu Dec 10 18:02:32 CET 2015
```

Also check the date and time stored in the hardware clock:

```
$ sudo hwclock -r
Thu 10 Dec 2015 06:03:01 PM CET  -0.546570 seconds
```

If the returned date and time is not correct, or “hwclock” returns an error, use the “-w” option to set the hardware clock to the current time:

```
 $ sudo hwclock -w
```

Then recheck the time stored in the hardware clock to ensure it matches. Linux may have failed to automatically update the hardware clock after the last reboot if its internal registers contained invalid values.

If the RTC still doesn’t work, you should check if the Pi sees the RTC chip on the I²C bus. Run these two commands:

```
$ sudo modprobe -r rtc_ds1307
$ sudo i2cdetect 1
WARNING! This program can confuse your I2C bus, cause data loss and worse!
I will probe file /dev/i2c-1.
I will probe address range 0x03-0x77.
Continue? [Y/n]
     0  1  2  3  4  5  6  7  8  9  a  b  c  d  e  f
00:          -- -- -- -- -- -- -- -- -- -- -- -- --
10: -- -- -- -- -- -- -- -- -- -- -- -- -- -- -- --
20: -- -- -- -- -- -- -- -- -- -- -- -- -- -- -- --
30: -- -- -- -- -- -- -- -- -- -- -- -- -- -- -- --
40: -- -- -- -- -- -- -- -- -- -- -- -- -- -- -- --
```

```
50: -- -- -- -- -- -- -- 57 -- -- -- -- -- -- -- --
60: 60 -- -- -- -- -- -- -- -- -- -- -- -- -- -- 6f
70: -- -- -- -- -- -- -- -
```

You should see “6f” in the address list. This is the address of the RTC.

If the RTC address is detected, double check your software installation for issues at the Linux modules level.

Run the “lsmod” command to list the loaded modules and check that “i2c_dev” and “i2c_bcm2708” are both listed.

If the RTC address is not detected, the cause could be a hardware problem, on the Strato board or the Raspberry Pi. If you have another Pi or Strato board, try swapping them to isolate the faulty board.

Configuring the serial port

On Raspberry Pi 3 and 4, the main UART (ttyAMA0) is used by default for Bluetooth, and the TX/RX pins on the GPIO connector are controlled by a limited function Mini UART (ttyS0).

To route the main UART to the RX/TX pins that are connected to the Strato Pi serial ports you could disable Bluetooth. Edit /boot/config.txt and add these lines at the end of the file:

```
# Disable Bluetooth
dtoverlay=pi3-disable-bt
```

You may also run the following command to disable the Bluetooth HCI UART driver:

```
sudo systemctl disable hciuart
```

Alternatively, you may use the pi3-miniuart-bt overlay to switch Bluetooth to use the mini UART (ttyS0), and restore ttyAMA0 to GPIOs 14 and 15. Refer to the Raspberry Pi UARTs documentation page[1] for additional information.

If you are using Strato Pi’s serial ports for your applications, you also need to disable the Linux serial console, otherwise it will send console data to the serial port.

Disable the ttyAMA0 console service:

```
sudo systemctl disable serial-getty@ttyAMA0.service
```

Edit the /boot/cmdline.txt file and delete the serial console configuration:

```
console=serial0,115200
```

[1] https://www.raspberrypi.org/documentation/configuration/uart.md

Using Strato Pi Base

Real Time Clock

Strato Pi Base has a hardware real time clock with a dedicated long-life non-rechargeable back-up battery.

Once the RTC modules and configuration files are properly installed, you will simply use the date and time commands to control the hardware clock.

Secure element

Strato Pi Base optionally embeds the ATECC608A or ATECC608B (depending on production lot) secure element chip from Microchip. The chip is connected to the Raspberry Pi via the I²C bus (default address: 0x60).

Its key features are:

- ✓ Cryptographic co-processor with secure hardware-based key storage
- ✓ Protected storage for up to 16 Keys, certificates or data
- ✓ Hardware support for asymmetric sign, verify, key agreement – ECDSA: FIPS186-3 Elliptic Curve Digital Signature
    - ✓ ECDH: FIPS SP800-56A Elliptic Curve Diffie-Hellman
    - ✓ NIST standard P256 elliptic curve support
- ✓ Hardware support for symmetric algorithms
    - ✓ SHA-256 & HMAC hash including off-chip context save/restore
    - ✓ AES-128: encrypt/decrypt, Galois field multiply for GCM
- ✓ Networking key management support
    - ✓ Turnkey PRF/HKDF calculation for TLS 1.2 & 1.3
    - ✓ Ephemeral key generation and key agreement in SRAM – Small message encryption with keys entirely protected
- ✓ Secure boot support
    - ✓ Full ECDSA code signature validation, optional stored digest/signature – optional communication key disablement prior to secure boot
    - ✓ Encryption/Authentication for messages to prevent on-board attacks
- ✓ Internal high-quality FIPS 800-90 A/B/C Random Number Generator (RNG)
- ✓ Two high-endurance monotonic counters
- ✓ Guaranteed unique 72-bit serial number.

Serial port

Strato Pi Base uses the Raspberry Pi standard UART TX/RX pins on the GPIO connector to implement a standard serial port with support for both RS-232 and RS-485.

Simply connect the RS-232 RX, TX and GND lines to the RS-232 posts of the Strato Pi terminal block or the RS-485 A, B and GND to the RS-485 posts of the terminal block.

Never connect both RS-232 and RS-485 lines to Strato Pi. Strato implements a single serial port, not two.

Both interfaces are isolated from the Raspberry Pi's serial lines using dedicated opto-couplers and from the main power supply with a high-efficiency DC-DC converter. This configuration should prevent ground loops between devices connected through the serial lines.

The RS-485 TX/RX switching is implemented automatically in the Strato Pi's micro-controller, based on speed and number of bits detection, and is completely transparent to the software controlling the UART on Raspberry Pi. See "Advanced configuration" below for alternative configurations.

The RS-485 line has 620 Ohm pull-up and pull-down resistors on lines A and B. The biasing resistors ensure that, during idle periods the data lines are kept at a stable voltage level and prevent false triggering of receiver input.These resistors can be disabled by removing jumpers JP1 and JP3 respectively.

A 100 Ohm termination resistor between A and B can be enabled installing jumper JP2.

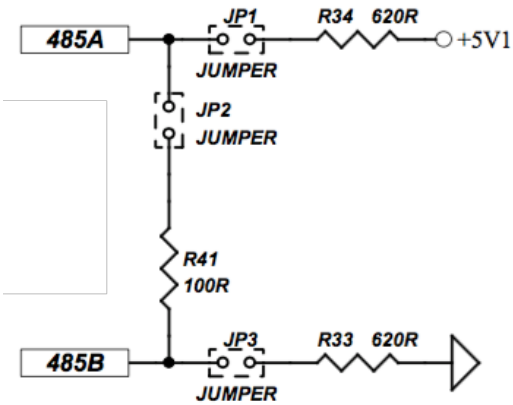

RS-485 JUMPERS SCHEMATIC

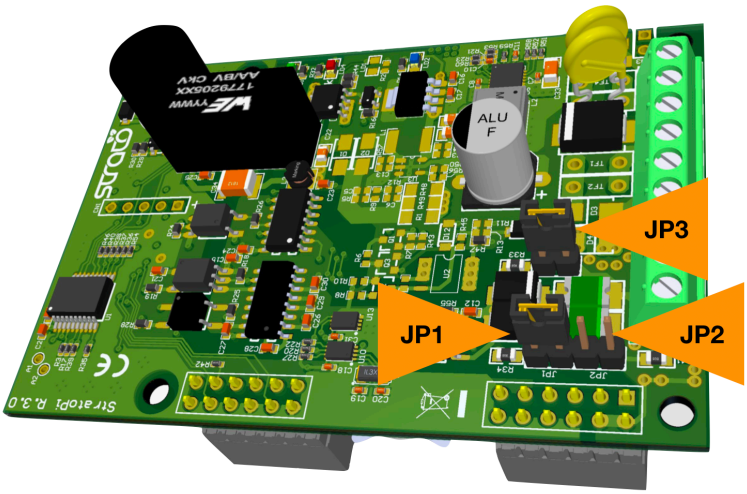

RS-485 JUMPERS POSITION

Buzzer

Strato Pi Base has an on-board buzzer that can be controlled using GPIO20. Simply set GPIO20 to high to emit a continuous sound, and back to low to stop. The buzzer is not intended to emit sound indefinitely and could be damaged doing so.

Hardware watchdog

Strato Pi Base implements a dedicated hardware watchdog circuit that can be used to perform a full power cycle of the Raspberry Pi.

The watchdog is normally disabled. To enable it, set GPIO6 pin to high. While GPIO6 is high, the Strato Pi controller will watch for state changes of the GPIO5 heartbeat pin. You should ensure that GPIO5 flips its state between high and low faster than every 60 seconds.

If the Strato Pi Base controller doesn't see GPIO5 changing state for more than 60 seconds, it will initiate a shutdown procedure, rising the GPIO12 timeout pin to high, to signal that a watchdog timeout has occurred.

If possible, you should immediately initiate a software shutdown on Raspberry Pi, and set the GPIO16 shutdown pin to high. When GPIO16 is set to high or 60 seconds after the timeout, Strato Pi will wait 60 seconds more, then power cycle the Raspberry Pi.

Note that Strato Pi Base will power cycle the Raspberry Pi even if GPIO16 is not set high. In this case the power cycles occurs 120 seconds after the heartbeat timeout.

See "Advanced configuration" below for alternative configurations.

Power cycle

You can start a delayed power cycle by rising Raspberry Pi's GPIO16 pin.

When GPIO16 is set to high, Strato Pi Base will wait 60 seconds and then power off the Pi board for 5 seconds.

The power cycle doesn't affect the VSOUT auxiliary power supply output.

See "Advanced configuration" below for alternative configurations.

Advanced configuration

The Strato Pi Base logic controller can be configured from the Raspberry Pi to change the default behavior and timing parameters of the hardware watchdog and the power cycle functionalities.

The RX/TX switching mode (TX-Enable control) of the RS-485 serial port is also configurable. Other than the default automatic switching, passive mode as well as fixed serial parameters settings are available.

These configuration parameters can be accessed using the Strato Pi kernel module or implementing the underlying ASCII-based serial protocol described in the "Strato Pi Logic Controller Advanced Configuration Guide" document.

Thermal considerations for Strato Pi Base server

The Raspberry Pi draws power and generates heat proportionally to CPU and GPU load.

The Strato Pi main regulator also generates heat proportionally to the total amount of current that it has to supply to the Raspberry and, if present, external devices.

The thermal behaviour of Strato Pi Base server is dynamic and affected by operating conditions and the external environment temperature.

The Raspberry Pi CPU has the ability to throttle down its clock speed once a certain core temperature is reached. This prevents CPU overheating, also limiting the temperature inside the enclosure, when the CPU load is high for a significant amount of time.

The following charts show the thermal behaviour of Strato Pi Base server in different conditions, in a typical installation with the device under test installed in a standard, not ventilated DIN cabinet:

- 35C and 45C ambient temperature (the ambient temperature is measured inside the DIN cabinet, so it is the actual air temperature surrounding the Strato Pi Base server enclosure)
- Raspberry Pi 3 Model B+ and Raspberry Pi 4 Model B[2]
- very low CPU load compared to very high load (all four cores loaded at 100%).

In all cases the Raspberry Pi 4 Model B runs significantly warmer than the Raspberry Pi 3 Model B+. Unless the ambient temperature is low and ventilation is optimal, reducing the CPU clock speed of the Pi 4 would be highly advisable.

Strato Pi Base server is also available with the SPBF10X Strato Pi Fan active cooling option.

The effectiveness of the Strato Pi Fan depends on several factors, including the external environment conditions, CPU/GPU load, and other electrical loads.

In general terms, the fan will significantly increase the airflow inside the enclosure, and improve heat transfer away from the CPU and the other nearby components on the Raspberry Pi board.

The CPU will run cooler than without Strato Pi Fan, and it will take longer and higher loads to reach its throttling limits.

Under ideal conditions, Strato Pi Fan may reduce both the CPU temperature and the average air temperature inside the enclosure by up to 15 °C.

Refer to the SPBF10X Strato Pi Fan User Guide for additional information.

[2] All tests performed with Raspbian Buster Lite and, on Raspberry Pi 4, VL805 firmware version 000137ab.

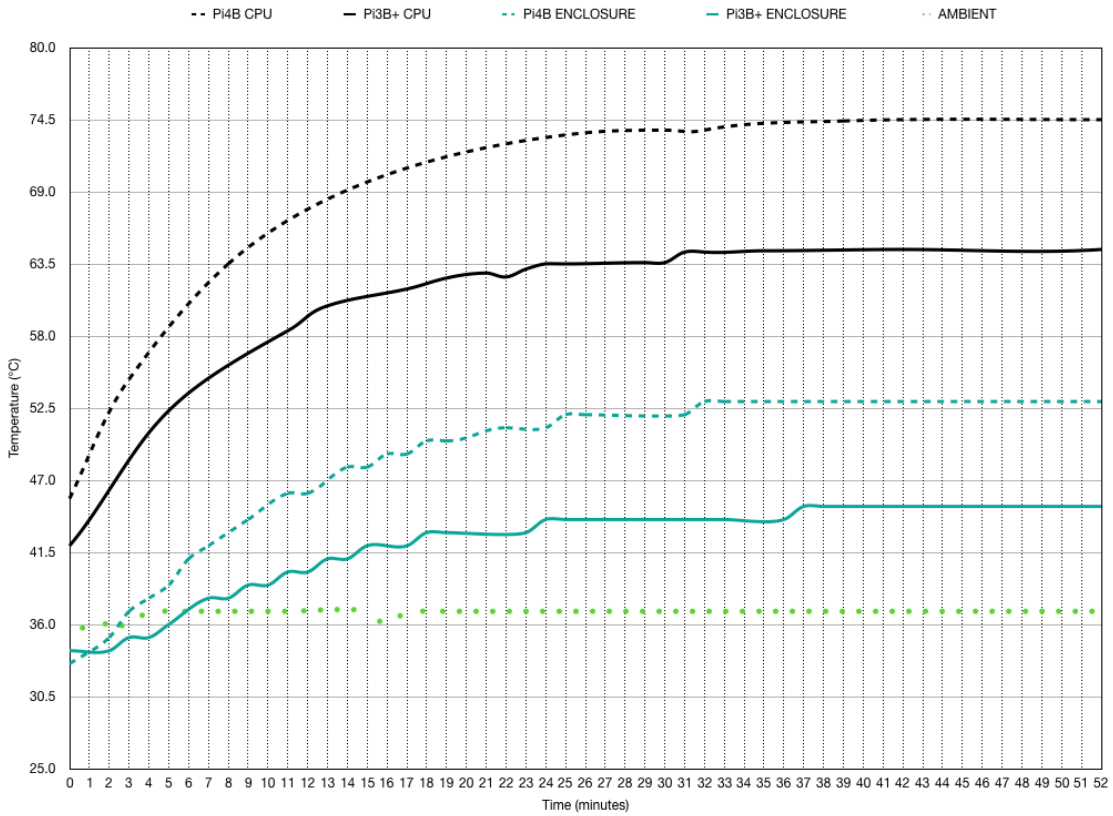

35C AMBIENT TEMPERATURE, LOW CPU LOAD

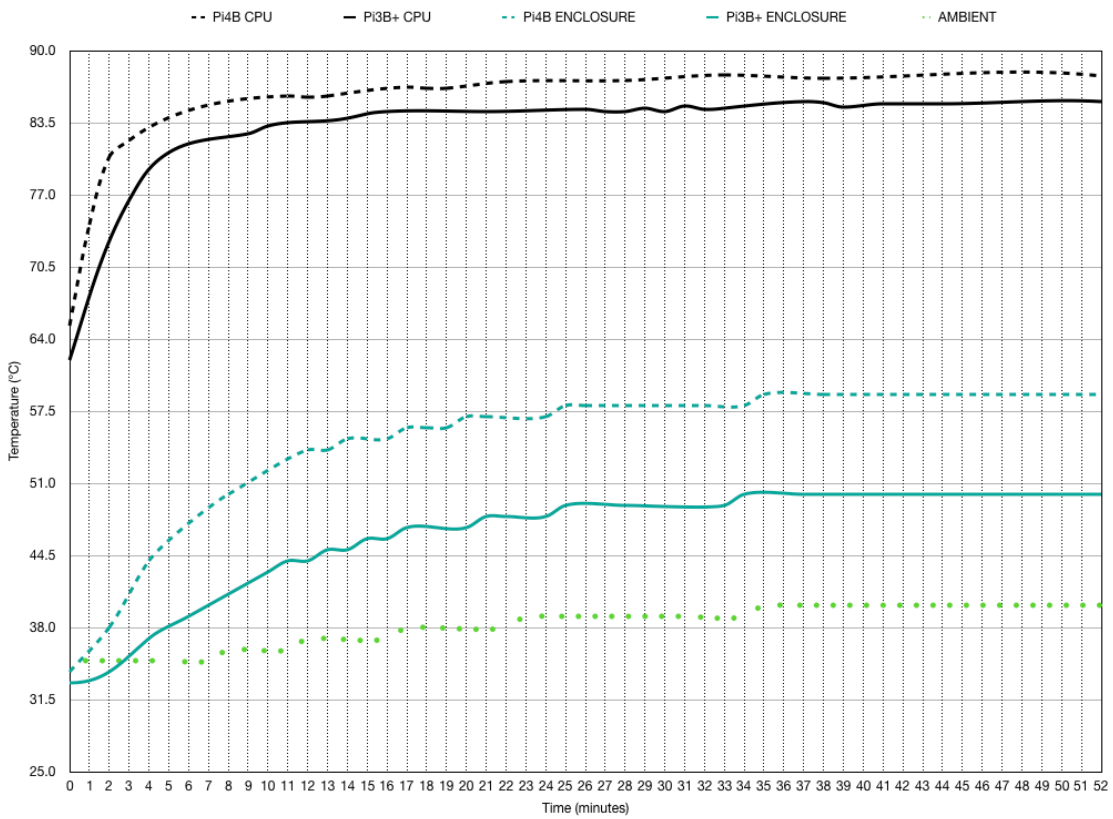

35C AMBIENT TEMPERATURE, HIGH CPU LOAD

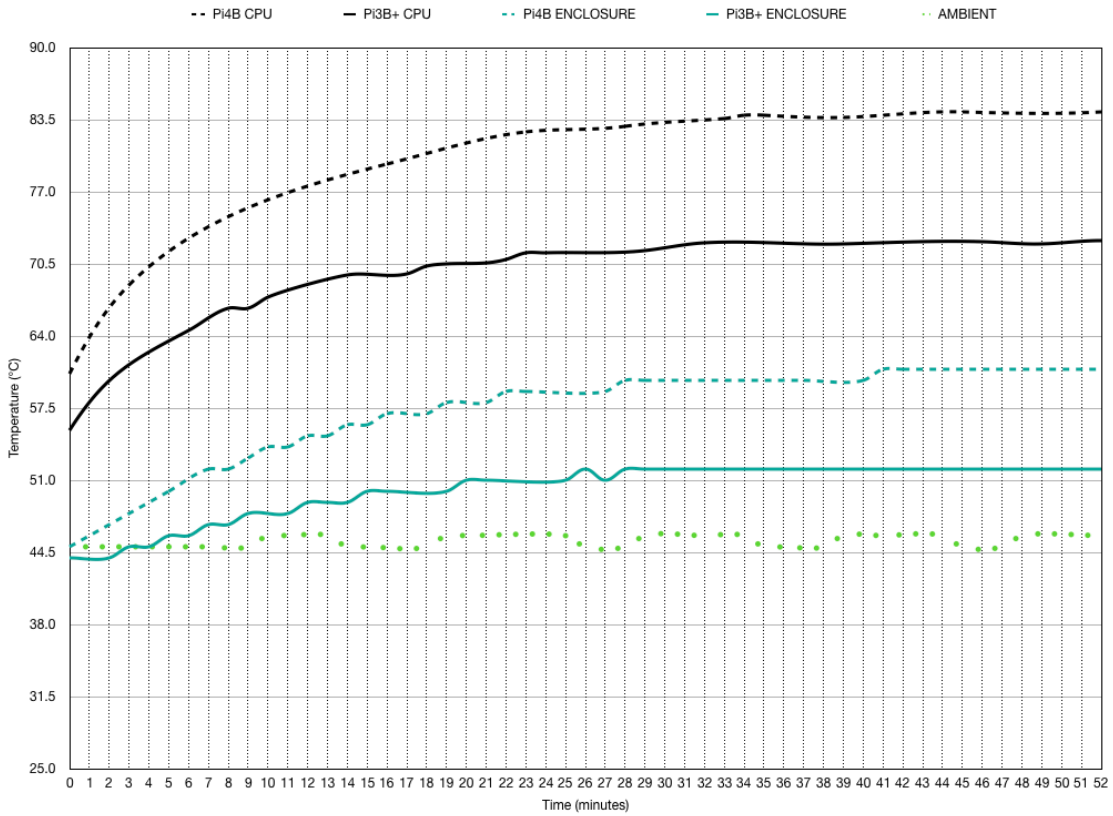

45C AMBIENT TEMPERATURE, LOW CPU LOAD

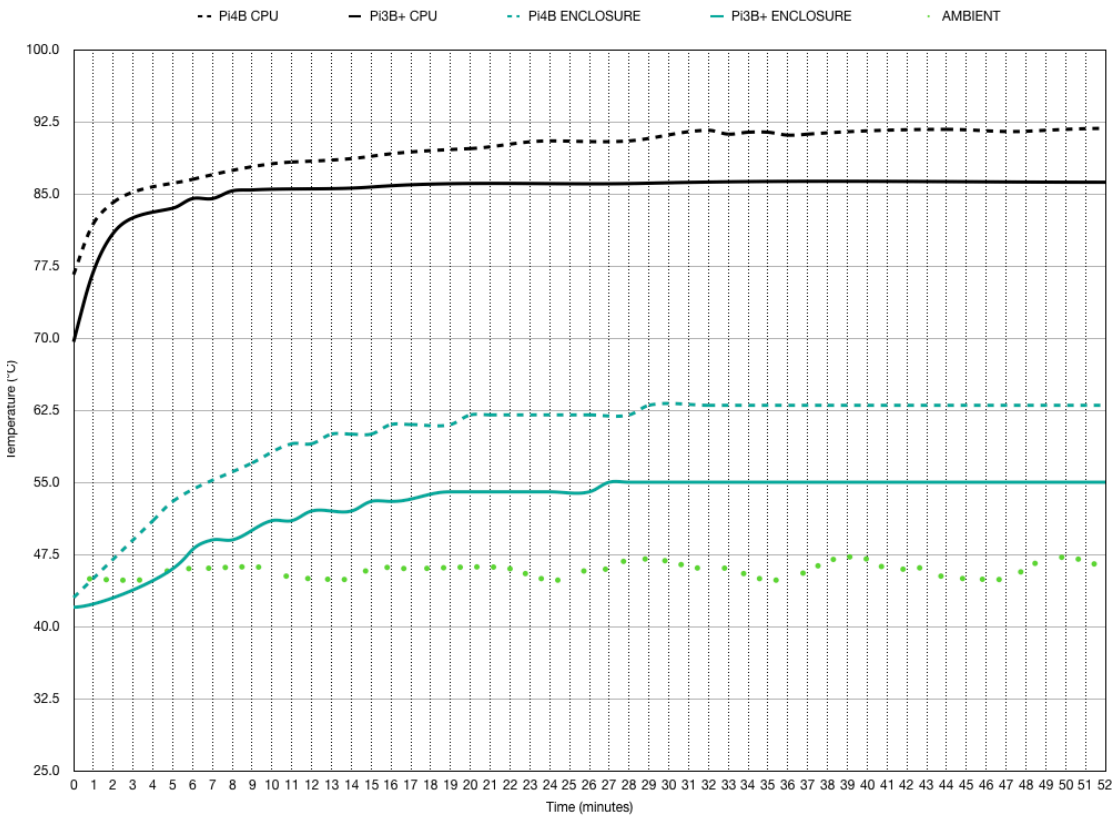

45C AMBIENT TEMPERATURE, HIGH CPU LOAD

Block diagram

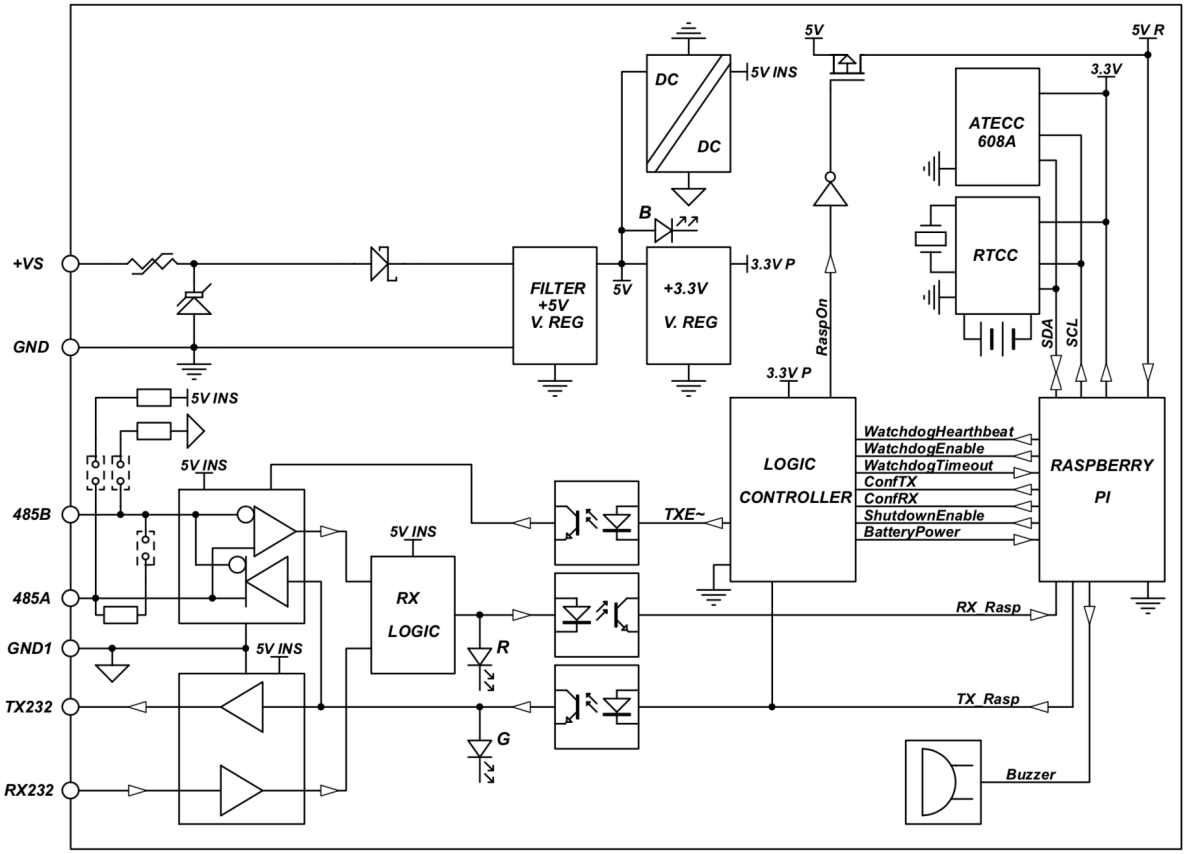

STRATO PI BASE BLOCK DIAGRAM

Technical specifications[3]

Power supply	9-28 V⎓ (VDC) Reverse polarity protection with 2.2 A resettable fuse. Surge protection up to ±1000V/2ohms 1.2/50µs
Current consumption at VS+ 12V⎓ including Raspberry Pi 4, with Ethernet and RS-485 connected, no USB devices	low CPU load: 320 mA 100% CPU load, before throttling: 590 mA 100% CPU load, throttled: 500 mA SPBF10X fan option, add: 50 mA Actual current consumption may vary based on working conditions
Current consumption at VS+ 24V⎓ including Raspberry Pi 4, with Ethernet and RS-485 connected, no USB devices	low CPU load: 190 mA 100% CPU load, before throttling: 320 mA 100% CPU load, throttled: 260 mA SPBF10X fan option, add: 25 mA Actual current consumption may vary based on working conditions
Raspberry platform compatibility	Pi 4 Model B Pi 3 Model B+ Pi 3 Model B Pi 2 Model B (tested with Pi 4 Model B for regulatory compliance)
Serial communication ports	RS-485 Half-Duplex with automatic data direction management RS-232 Full-Duplex
Baud Rates on COMM ports	1200 to 115200
ESD-Protection Voltage on RS-232 TX/RX	±15 kV human body model ±8 kV contact discharge
ESD-Protection Voltage on RS-485 A/B	±15 kV human body model ±8 kV contact discharge
Surge protection on RS-485 A/B	Surge protection up to ±500V/2ohms 1.2/50µs; 600 W peak pulse power capability at 10/1000µs waveform
Fail safe feature on RS-485	Yes
Electromagnetic immunity compliance	EN 61000-4-2 (ESD) EN 61000-4-3 (Radiated RF Field) EN 61000-4-4 (Burst/fast transient) EN 61000-4-5 (Surge) EN 61000-4-6 (Conducted) EN 61000-4-8 (Power frequency magnetic field)

[3] All tests performed with Raspbian Buster Lite and, on Raspberry Pi 4, VL805 firmware version 000137ab.

Real time clock	Internal RTCC circuit with backup lithium battery. Only use CR1025 Lithium / Manganese Dioxide (Li/MnO2) batteries. Expected battery life without main power supply: ~2 years
Housing	standard 4M for DIN rail
Operating temperature	Strato Pi Base board only: -20…+70 °C Strato Pi Base server: -20…+50 °C Strato Pi Base server with SPBF10X: -20…+65 °C
Storage temperature	-30…+70 °C
Relative humidity	5% to 90% noncondensing
Protection degree	IP20
Fan noise (with SPBF10X fan option)	23.6 dBA
Weight	Strato Pi Base board: 30 g Strato Pi Base server: 150 g Strato Pi Base server with SPBF10X option: 160 g

Dimensions

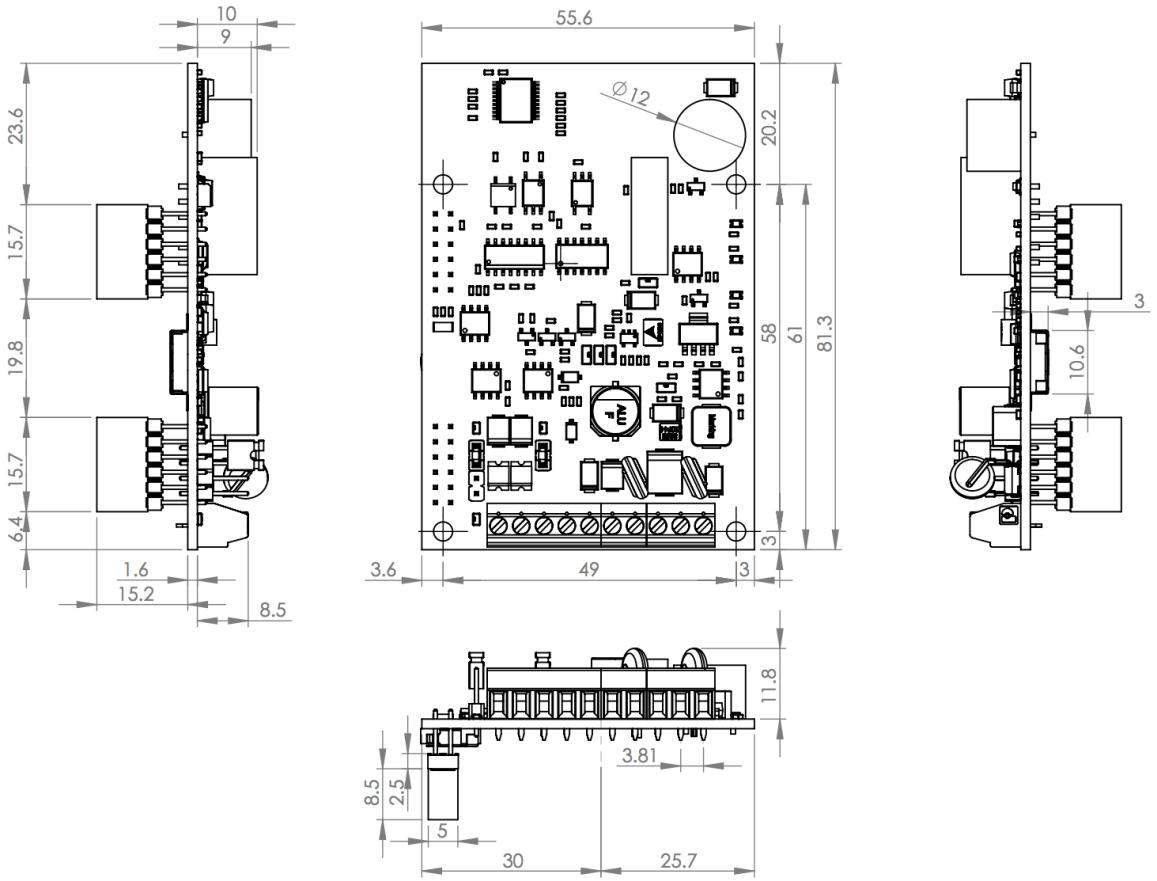

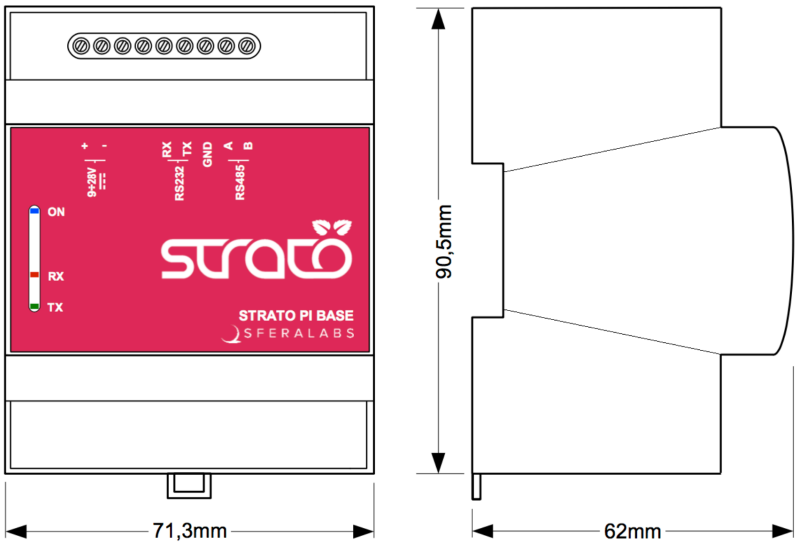

DIMENSIONS (mm)

Disposal

Waste Electrical & Electronic Equipment

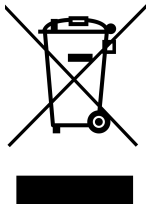

(Applicable in the European Union and other European countries with separate collection systems). This marking on the product, accessories or literature indicates that the product should not be disposed of with other household waste at the end of their working life. To prevent possible harm to the environment or human health from uncontrolled waste disposal, separate these items from other types of waste and recycle them responsibly to promote the sustainable reuse of material resources. Household users should contact either the retailer where they purchased this product, or their local government office, for details of where and how they can take these items for environmentally safe recycling. This product and its electronic accessories should not be mixed with other commercial wastes for disposal.

Strato Pi Base contains a small non rechargeable manganese dioxide lithium coin battery.

In the Strato Pi Base server, the battery is not accessible from the outside. You should first remove the case top body to gain access to the Strato Pi Base circuit board. Always remove the battery before disposing of this product.

Installation and use restrictions

Standards and regulations

The design and the setting up of electrical systems must be performed according to the relevant standards, guidelines, specifications and regulations of the relevant country. The installation, configuration and programming of the devices must be carried out by trained personnel.

The installation and wiring of connected devices must be performed according to the recommendations of the manufacturers (reported on the specific data sheet of the product) and according to the applicable standards.

All the relevant safety regulations, e.g. accident prevention regulations, law on technical work equipment, must also be observed.

Safety instructions

Carefully read the safety information section at the beginning of this document.

Set-up

For the first installation of the device proceed according to the following procedure:

- ✓ make sure all power supplies are disconnected
- ✓ install and wire the device according to the schematic diagrams on the specific product user guide
- ✓ after completing the previous steps, switch on the power supply and other related circuits.

Conformity Information

EU

This device complies with the following applicable European Community harmonised standards:

- ✓ 2014/30/EU - Electromagnetic Compatibility Directive (EMC)
- ✓ 2011/65/EU and 2015/863/EU - Restriction of the use of certain hazardous substances in electrical and electronic equipment (RoHS)

The following harmonised standards have been used to demonstrate conformity to these directives:

- ✓ EN61000-6-2:2019 - EMC Immunity standard for industrial environments
- ✓ EN 61000-6-3:2007/A1:2011/AC:2012 - EMC Emission standard for residential, commercial and light-industrial environments

The declaration of conformity is available at: https://www.sferalabs.cc

USA

This equipment has been tested and found to comply with the limits for a Class B digital device, pursuant to part 15 of the FCC Rules. These limits are designed to provide reasonable protection against harmful interference in a residential installation. This equipment generates, uses and can radiate radio frequency energy and, if not installed and used in accordance with the instructions, may cause harmful interference to radio communications. However, there is no guarantee that interference will not occur in a particular installation. If this equipment does cause harmful interference to radio or television reception, which can be determined by turning the equipment off and on, the user is encouraged to try to correct the interference by one or more of the following measures:

- Reorient or relocate the receiving antenna
- Increase the separation between the equipment and receiver
- Connect the equipment into an outlet on a circuit different from that to which the receiver is connected
- Consult the dealer or an experienced radio/TV technician for help.

Shielded cables must be used with this equipment to maintain compliance with FCC regulations.

This device complies with Part 15 of the FCC Rules. Operation is subject to the following two conditions: (1) this device may not cause harmful interference, and (2) this device must accept any interference received, including interference that may cause undesired operation.

CANADA

This Class B digital apparatus complies with Canadian ICES-003.

Cet appareil numérique de la classe B est conforme à la norme NMB-003 du Canada.

RCM AUSTRALIA / NEW ZEALAND

This product meets the requirements of the standard EN 61000-6-3:2007/A1:2011/AC:2012 - Emission for residential, commercial and light-industrial environments.

Compliance information for Raspberry Pi

Strato Pi Base model SPMB30X contains a standard Raspberry Pi 3 Model B single board computer. Strato Pi Base model SPMB30XP contains a standard Raspberry Pi 3 Model B+ single board computer. Strato Pi Base model SPMB30X41, SPMB30X42, SPMB30X44, SPMB30X48 contain a standard Raspberry Pi 4 Model B single board computer. These boards have WiFi and Bluetooth radios. They are user accessible and replaceable.

EU

Raspberry Pi 3 Model B, Raspberry Pi 3 Model B+ and Raspberry Pi 4 Model B are in conformity with the essential requirements and other relevant requirements of the Radio Equipment Directive 2014/53/EU.

USA

Raspberry Pi 3 Model B FCC IDENTIFIER: **2ABCB-RPI32**

Raspberry Pi 3 Model B+ FCC IDENTIFIER: **2ABCB-RPI3BP**

Raspberry Pi 4 Model B FCC IDENTIFIER: **2ABCB-RPI4B**

The antenna(s) used for this transmitter must be installed to provide a separation distance of at least 20 cm from all persons and must not be colocated or operating in conjunction with any other antenna or transmitter, except in accordance with FCC multitransmitter product guidelines. This (WiFi DTS) device has 20 MHz bandwidth mode.

CANADA

Raspberry Pi 3 Model B IC CERTIFICATION No.: **20953-RPI32**

Raspberry Pi 3 Model B+ IC CERTIFICATION No.: **20953-RPI3BP**

Raspberry Pi 4 Model B IC CERTIFICATION No.: **20953-RPI4B**

This device complies with Industry Canada license-exempt RSS standard(s). Operation is subject to the following two conditions: (1) this device may not cause interference, and (2) this device must accept any interference, including interference that may cause undesired operation of the device.

Le présent appareil est conforme aux CNR d'Industrie Canada applicables aux appareils radio exempts de licence. L'exploitation est autorisée aux deux conditions suivantes: (1)

l'appareil ne doit pas produire de brouillage, et (2) l'utilisateur de l'appareil doit accepter tout brouillage radioélectrique subi, même si le brouillage est susceptible d'en compromettre le fonctionnement.