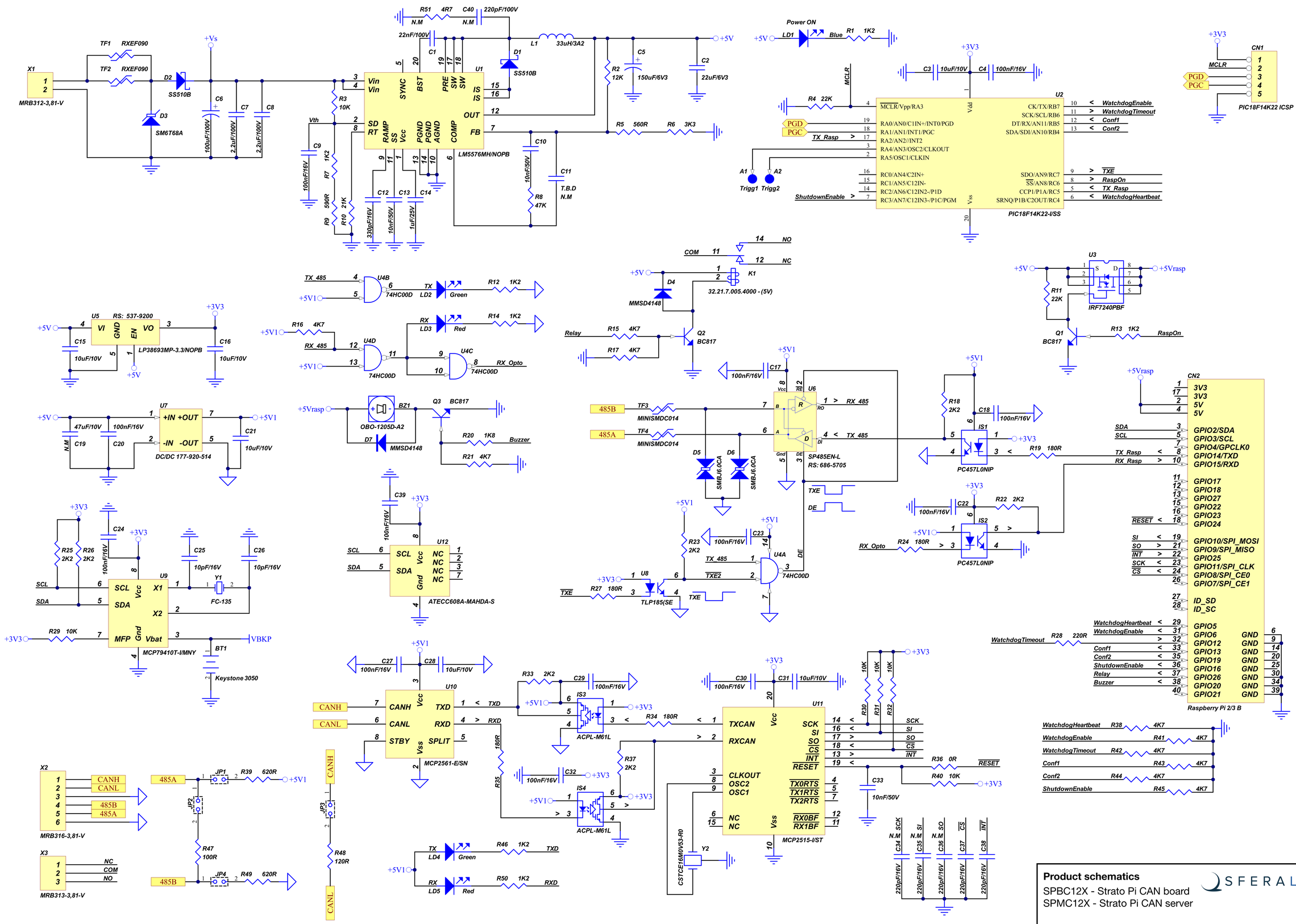

Product schematics

SPBC12X - Strato Pi CAN board

SPMC12X - Strato Pi CAN server

SFERALABS

© 2015-2021 Sfera Labs S.r.l.