Strato Pi CM User Guide

March 2022

Revision 009

SCMS13X *Strato Pi CM Solo*

SCM313X *Strato Pi CM 3*

SCM313XPL *Strato Pi CM 3+ Lite*

SCM313XP1 *Strato Pi CM 3+/8GB*

SCM313XP2 *Strato Pi CM 3+/16GB*

SCM313XP3 *Strato Pi CM 3+/32GB*

SFERALABS

Safety information 4
Qualified personnel 4
Hazard levels 4
Safety instructions 5
General safety instructions 5
Battery 6
Introduction 7
Features 8
Device identification 9
Hardware Installation 9
Opening the case 10
Closing the case 10
Raspberry Pi Compute Module installation 10
How to flash the eMMC 11
microSD installation 11
Replacing the RTC backup battery 12
Terminal block 13
Power supply 15
Dedicated GPIO pins 16
Software installation and configuration 17
Installing the Strato Pi utility 17
Installing the Strato Pi kernel module 17
Installing the Real Time Clock software 18
Testing the Real Time Clock 18
Configuring the serial port 19
Using Strato Pi CM 20
Real Time Clock 20
Serial port 20
Push button 21
LED 21
Hardware watchdog 22
Reset cycle 22
Advanced configuration 23
Block diagram 24
Technical specifications 25
Dimensions 26

Disposal 27
Installation and use restrictions 27
Standards and regulations 27
Safety instructions 27
Set-up 27
Conformity Information 28
EU 28

Be sure to always remove the power supply before inserting or removing the Raspberry Pi Compute Module from the Strato Pi CM.

Follow all applicable electrical safety standards, guidelines, specifications and regulations for installation, wiring and operations of Strato Pi CM.

Carefully and fully read this Strato Pi CM user guide before installation.

Strato Pi CM is not authorised for use in safety-critical applications where a failure of the product would reasonably be expected to cause personal injury or death. Safety-critical applications include, without limitation, life support devices and systems, equipment or systems for the operation of nuclear facilities and weapons systems. Strato is neither designed nor intended for use in critical military or aerospace applications or environments and for automotive applications or environment. Customer acknowledges and agrees that any such use of Strato Pi CM is solely at Customer's risk, and that Customer is solely responsible for compliance with all legal and regulatory requirements in connection with such use.

Sfera Labs S.r.l. may make changes to specifications and product descriptions at any time, without notice. The product information on the web site or materials is subject to change without notice.

Please download and read the Sfera Labs Terms and Conditions document available at:

http://www.sferalabs.cc

Strato and Sfera Labs are trademarks of Sfera Labs S.r.l. Other brands and names may be claimed as the property of others.

Copyright © 2018-2022 Sfera Labs S.r.l. All rights reserved.

Safety information

Carefully and fully read this user guide before installation and retain it for future reference.

Qualified personnel

The product described in this manual must be operated only by personnel qualified for the specific task and installation environment, in accordance with all relevant documentation and safety instructions. A qualified person should be capable of fully identifying all installation and operation risks and avoid potential hazards when working with this product.

Hazard levels

This manual contains information you must observe to ensure your personal safety and prevent damage to property. Safety information in this manual are highlighted by the safety symbols below, graded according to the degree of danger.

DANGER

Indicates a hazardous situation which, if not avoided, **will** result in death or serious personal injury.

WARNING

Indicates a hazardous situation which, if not avoided, **may** result in death or serious personal injury.

CAUTION

Indicates a hazardous situation which, if not avoided, can result in minor or moderate personal injury.

NOTICE

Indicates a situation which, if not avoided, can result in damage of property.

Safety instructions

General safety instructions

Protect the unit against moisture, dirt and any kind of damage during transport, storage and operation. Do not operate the unit outside the specified technical data.

Never open the housing. If not otherwise specified, install in closed housing (e.g. distribution cabinet). Earth the unit at the terminals provided, if existing, for this purpose. Do not obstruct cooling of the unit. Keep out of the reach of children.

WARNING

Life threatening voltages are present within and around an open control cabinet.

When installing this product in a control cabinet or any other areas where dangerous voltages are present, always switch off the power supply to the cabinet or equipment.

WARNING

Risk of fire if not installed and operated properly.

Follow all applicable electrical safety standards, guidelines, specifications and regulations for installation, wiring and operations of this product.

The Raspberry Pi Compute Module board could generate a substantial amount of heat when the software forces the CPU and/or GPU to operate at high load levels. Ensure that the product is properly installed and ventilated to prevent overheat.

NOTICE

The connection of expansion devices to this product may damage the product and other connected systems, and may violate safety rules and regulations regarding radio interference and electromagnetic compatibility.

Use only appropriate tools when installing this product. Using excessive force with tools may damage the product, alter its characteristics or degrade its safety.

Battery

This product uses a small lithium non-rechargeable battery to power its internal real time clock (RTC).

WARNING

Improper handling of lithium batteries can result in an explosion of the batteries and/or release of harmful substances.

Worn-out or defective batteries can compromise the function of this product.

Replace the RTC lithium battery before it is completely discharged. The lithium battery must be replaced only with an identical battery. See the "Replacing the RTC backup battery" section for instructions.

Do not throw lithium batteries into fire, do not solder on the cell body, do not recharge, do not open, do not short-circuit, do not reverse polarity, do not heat above 100°C and protect from direct sunlight, moisture and condensation.

Dispose of used batteries according to local regulations and the battery manufacturer's instructions.

Introduction

Strato Pi CM is an industrial computer based on the Raspberry Pi Compute Module, in a compact 2 modules DIN rail case.

It is available in several versions. Strato Pi CM 3 ships with a Raspberry Pi Compute Module 3 pre-installed, Strato Pi CM 3+ ships with a Raspberry Pi Compute Module 3+ (8GB, 16GB or 32GB eMMC versions) pre-installed, while Strato Pi CM Solo doesn't include the Compute Module and is compatible with all current versions of the Compute Module: 1, 3, 3 Lite, 3+ and 3+ Lite.

The information contained in this manual covers both Strato Pi CM 3, 3+ and Strato Pi CM Solo. Besides the fact that Strato Pi CM 3 and 3+ have the Compute Module pre-installed, all versions are otherwise identical.

This manual generally refers to both products as Strato Pi CM.

Features

Strato Pi CM, all versions:

- ✓ compatible with Raspberry Pi Compute Module 1, Raspberry Pi Compute Module 3, Raspberry Pi Compute Module 3 Lite, Raspberry Pi Compute Module 3+ 8GB, Raspberry Pi Compute Module 3+ 16GB, Raspberry Pi Compute Module 3+ 32GB, Raspberry Pi Compute Module 3+ Lite
- ✓ 9-28Vdc power supply, with surge and reverse polarity protection, and 1.1A resettable fuse
- ✓ up to 3.1A max current to the 5V Raspberry Pi Compute Module power supply input pins (at 24Vdc)
- ✓ real time clock with replaceable CR1025 Lithium / Manganese Dioxide back-up battery
- ✓ standard RS-485 interface to the Raspberry Pi serial line, with opto-isolator and electrostatic discharge protection
- ✓ 10/100 Ethernet port
- ✓ two USB 2.0 type-A ports
- ✓ hardware watchdog implemented in the Strato Pi CM micro-controller, fully independent from the Raspberry Pi Compute Module, controlled via the GPIO pins of the Raspberry Pi board and acting on the Raspberry Pi Compute Module hardware reset line
- ✓ front-panel LEDs for power supply, serial line activity, and one GPIO-controlled LED
- ✓ recessed push-button, hidden behind the front-panel, connected to a GPIO pin
- ✓ power supply and serial connections on a pluggable terminal block
- ✓ hidden service micro USB port with Micro-AB receptacle (to flash the Raspberry Pi Compute Module eMMC), can be accessed opening the case
- ✓ hidden microSD slot to install the external flash memory of the Raspberry Pi Compute Module 3 Lite, can be accessed opening the case
- ✓ packaged in a compact 2 modules DIN rail case

Strato Pi CM 3:

- ✓ pre-installed and tested Raspberry Pi Compute Module 3

Strato Pi CM 3+:

- ✓ pre-installed and tested Raspberry Pi Compute Module 3+, 8GB, 16GB or 32GB eMMC versions

Device identification

The device can be identified with the information provided in the rating and identification plate, permanently attached to the side of the case.

EXAMPLE RATING AND IDENTIFICATION PLATE

Hardware Installation

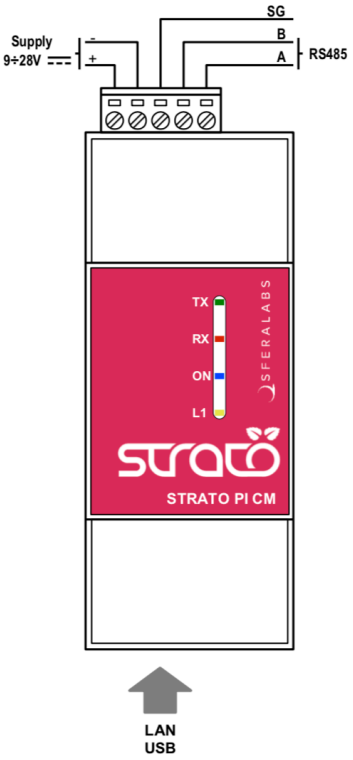

STRATO PI CM CONNECTION DIAGRAM

For the initial set-up, the plastic DIN rail must be removed to access the circuit boards and internal connectors.

The case also needs to be opened if the factory configuration of the RS-485 termination resistors must be changed (see below).

NOTICE

Before opening the Strato Pi Base case, disconnect all power sources and any connection to external devices, including USB and Ethernet cables.

Opening the case

Follow these steps, in the exact order, to open the case:

1. Remove the green pluggable terminal block
2. Remove the black plastic DIN rail hook
3. With a small flat screwdriver gently separate the bottom case and boards assembly from the top cover; lift the side next to the DIN rail hook first
4. The circuit boards assembly will simply slide out of the case, as it is mechanically held in place by the bottom case only

Closing the case

5. Replace the circuit boards assembly inside the case; ensure that the USB/Ethernet connectors are aligned with the opening in the case
6. Replace the case bottom, inserting the side opposite to the DIN rail hook first, then gently push the other side in place
7. Replace the black plastic DIN rail hook.

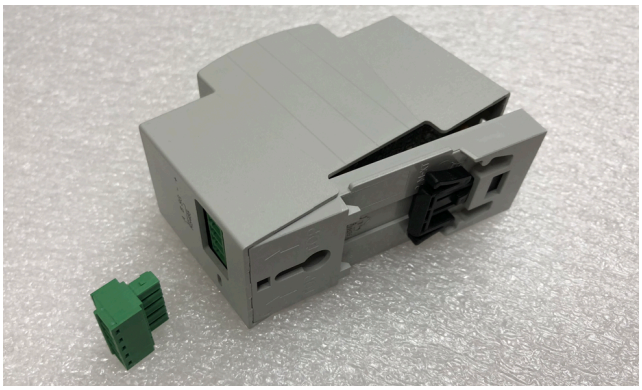

OPENING AND CLOSING THE CASE

Raspberry Pi Compute Module installation

To install your own Compute Module in Strato Pi CM Solo, or replace the pre-installed module in Strato Pi CM 3/3+, no tools are required. The Compute Module fits in a standard 200 pin DDR2 SODIMM (JEDEC MO-224 mechanical specification) slot.

NOTICE

Static electricity can damage the components in your system. To protect your system's components from static damage during the installation process, touch any of the unpainted metal surfaces on your computer's frame or wear an ESD wrist strap before handling internal components. Either method will safely discharge static electricity that's naturally present in your body.

When handling the Raspberry Pi Compute Module, be sure to hold it along the side edges using your thumb and index finger. Avoid touching the components and pin connectors as damage can occur.

Align the notches on the Compute Module with the ridges in the DDR2 slot. Insert the module using firm and even pressure, and push down on the module until the clips on the side of the slot snap into place.

How to flash the eMMC

The Compute Module versions 1, 3 and 3+ have an on-board eMMC device connected to the primary SD card interface.

To flash the eMMC, connect your host system (PC, Mac, Raspberry Pi, ...) to the Strato Pi CM internal micro USB port with a standard micro USB cable. The procedure is the same as what you would do when using a Compute Module IO board. Use the latest RPIBOOT utility from Raspberry Pi and follow its installation instructions.

No special procedure is required on the Strato Pi CM to enable the micro USB port.

microSD installation

Strato Pi CM has a microSD slot to install flash memory when the Compute Module 3 Lite is used, as it lacks an internal eMMC device.

The microSD slot is not directly accessible with the case closed. The slot is located on the vertical board, next to the USB/Ethernet modular connector.

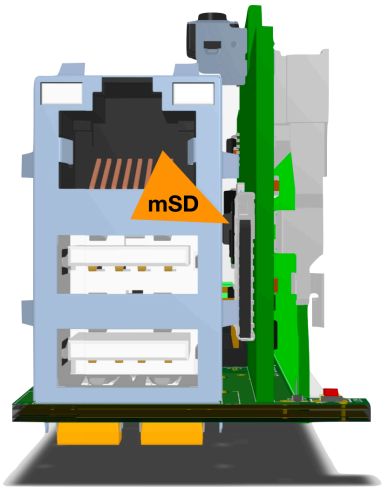

MICRO SD SLOT

Replacing the RTC backup battery

Strato Pi CM has a hardware real time clock with a dedicated long-life non-rechargeable back-up battery.

Strato Pi CM is shipped with a **CR1025** Lithium / Manganese Dioxide (Li/MnO2) battery installed.

The battery is only used to power the RTC chip when the main power is not available (when the Raspberry Pi Compute Module is off). Depending on operating conditions it should last up to two years if the Strato Pi CM is not powered, more if it regularly receives external power.

The RTC backup battery holder is soldered to the bottom layer of the horizontal circuit board. In the Strato Pi CM, the battery is not accessible from the outside. You should first remove the case body to gain access to the Strato Pi CM circuit boards. Follow the procedure described at the beginning of this chapter to open and replace the case.

WARNING

Improper handling of lithium batteries can result in an explosion of the batteries and/or release of harmful substances.

Worn-out or defective batteries can compromise the function of this product.

KEEP OUT OF REACH OF CHILDREN. Swallowing may lead to serious injury or death in as little as 2 hours due to chemical burns and potential perforation of the esophagus. Immediately see doctor.

Replace the RTC lithium battery before it is completely discharged. Replace the battery every 5 years even if the battery is still working properly. The lithium battery must be replaced only with an identical **CR1025** Lithium / Manganese Dioxide (Li/MnO2) battery.

Do not throw lithium batteries into fire, do not solder on the cell body, do not recharge, do not open, do not short-circuit, do not reverse polarity, do not heat above 100°C and protect from direct sunlight, moisture and condensation.

Dispose of used batteries according to local regulations and the battery manufacturer's instructions.

NOTICE

Before opening the Strato Pi Base case, disconnect all power sources and any connection to external devices, including USB cables.

Use a non-conductive pin or small tool to help extract the battery from its holder. Insert the new battery with a gentle push. You don't need tools to insert the battery. The battery is held into place by a spring contact.

Be sure to insert the battery so that the positive (+) terminal of the battery is in contact with the outer body of the battery holder, and the negative (-) terminal is in contact with the contact pad of the circuit board, as shown in the photo below.

Reversing the battery polarity may damage the product.

The real time clock will reset its time immediately when the RTC backup battery is disconnected.

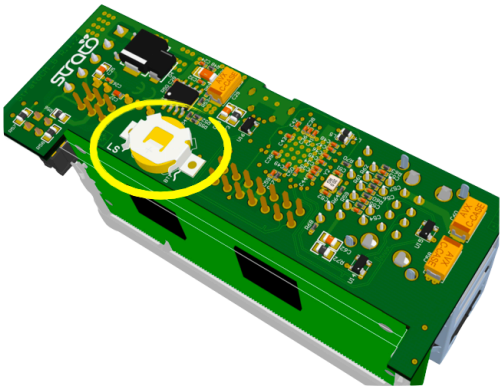

RTC BACKUP BATTERY

Terminal block

Strato Pi CM has a 5 positions terminal block for power and serial connections.

The maximum conductor cross section is 1.5 mm² (16 AWG), or 0.5 mm² when using ferrules (highly recommended). Recommended stripping length is 5 mm. Screw thread is M2. Never exceed 0.25 Nm torque when tightening the screws.

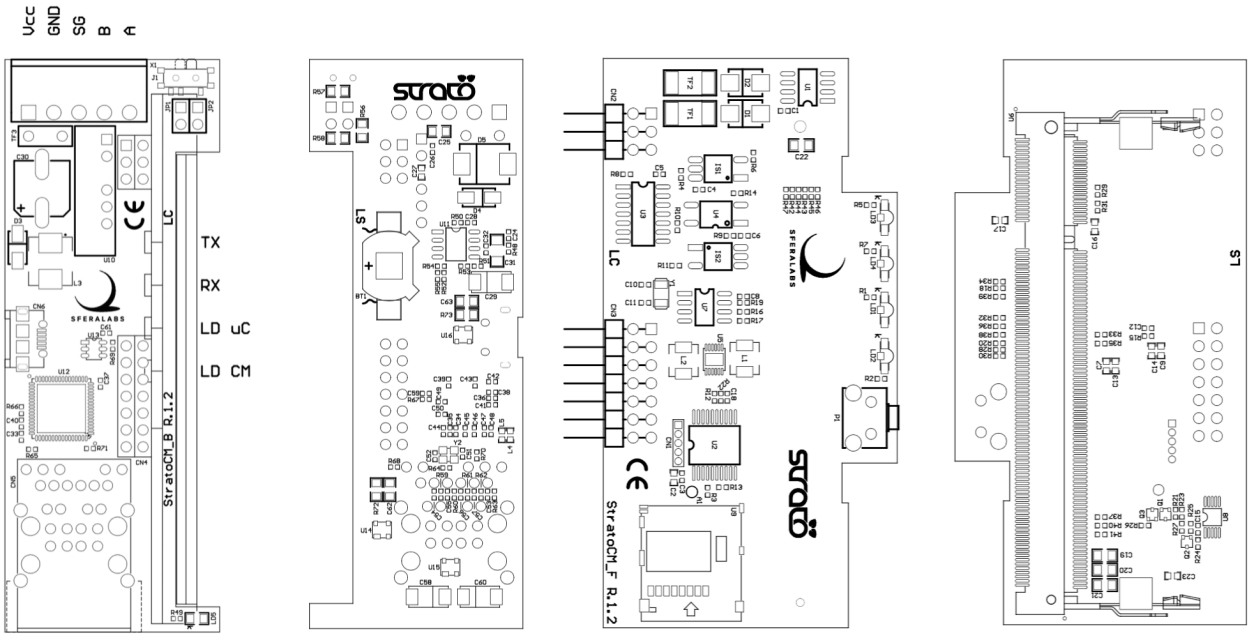

THE STRATO PI CM CIRCUIT BOARDS (FRONT AND BACK VIEW)

Power supply

Strato Pi CM can be powered with DC voltage only:

✓ DC: nominal voltage range 8.1V to 28.0V.

Respect the correct polarity shown in the schematic diagram (+ -). The power supply circuit implements reverse polarity protection using an auto resetting fuse and surge protection up to ±1000V/2ohms 1.2/50µs.

A blue on-board LED, also visible through the front panel of the DIN rail case, is lit when power supply is available. This LED also blinks while the Compute Module boot process is in progress.

The Strato Pi CM power supply stage is optimised to deliver up to 3A at 5V to the Raspberry Pi Compute Module.

Because Strato Pi CM has a 1.1A resettable fuse (polyfuse) on the power supply line, the maximum current that its regulator can deliver is also limited by this fuse, and depends on the input voltage.

The following table lists the typical measured output current of the power supply stage at different input voltages and the corresponding input current.

		9V	12V	24V
Iout	**Vout**	**Iin**	**Iin**	**Iin**
0.1	4.95	0.09	0.07	0.04
0.5	4.95	0.33	0.25	0.13
1.0	4.95	0.66	0.49	0.25
1.3	4.95	0.87	0.64	0.32
1.5	4.95	1.00	0.74	0.37
1.6	4.95	1.08	0.79	0.40
1.7	4.95	1.17 KO	0.84	0.42
1.8	4.95		0.90	0.45
1.9	4.95		0.95	0.47
2.0	4.95		1.02	0.50
2.2	4.95		1.13 KO	0.55
2.5	4.95			0.63
3.0	4.94			0.77

STRATO PI CM POWER SUPPLY STAGE TYPICAL IN/OUT VOLTAGE AND CURRENT

Dedicated GPIO pins

Strato Pi CM uses some of the Raspberry Pi Compute Module GPIO pins. These pins should not be used for other functions.

GPIO pin	Direction	Description
GPIO2/SDA		I²C SDA line for the real time clock
GPIO3/SCL		I²C SCL line for the real time clock
GPIO14/TXD	out	serial TX line
GPIO15/RXD	in	serial RX line
GPIO27	out	cycle high/low for watchdog heartbeat
GPIO22	out	set to high to enable the watchdog
GPIO17	in	high on watchdog timeout
GPIO18	out	set to high to enable the shutdown cycle
GPIO16	out	set to high to turn on LED L1
GPIO25	in	high when P1 button pressed
GPIO23	out	Soft serial TX for Strato MCU configuration
GPIO24	in	Soft serial RX for Strato MCU configuration

Software installation and configuration

All features of Strato Pi CM are controlled via dedicated GPIO, the I²C bus and a soft serial RX/TX interface to the embedded micro-controller and can be used with most operating systems and programming languages.

The following software installation notes are based on the Raspbian operating system.

Installing the Strato Pi utility

The Strato Pi utility is a simple command-line script to control Strato Pi's L1 LED and watchdog functions.

Run the following commands to download and install the Strato Pi utility:

```
$ cd /usr/local/bin
$ sudo wget http://sferalabs.cc/files/stratocm/strato
$ sudo chmod 755 strato
```

You can run the Strato Pi utility without arguments to print its options:

```
$ strato
Usage: strato led on|off|length_millis|length_millis pause_millis repeats
       strato watchdog enable|disable|heartbeat|timeout
       strato reset
```

All commands should be run as superuser, so always use sudo to run strato.

Installing the Strato Pi kernel module

The Strato Pi kernel module can be used to easily access Strato Pi CM's features via sysfs file system.

Refer to the following instructions to download and install the module or go to:

https://github.com/sfera-labs/strato-pi-kernel-module

for updated instructions, usage details and examples.

Download and install:

```
$ sudo apt install git raspberrypi-kernel-headers
$ git clone --depth 1 --recursive https://github.com/sfera-labs/strato-pi-
kernel-module.git
$ cd strato-pi-kernel-module
$ make
$ sudo make install
$ dtc -@ -Hepapr -I dts -O dtb -o stratopi.dtbo stratopi.dts
$ sudo cp stratopi.dtbo /boot/overlays/
```

Add the following line to /boot/config.txt:

```
dtoverlay=stratopi
```

Optionally, to be able to use the sysfs files not as super user, create a new group "stratopi" and set it as the module owner group by adding an udev rule:

```
$ sudo groupadd stratopi
$ sudo cp 99-stratopi.rules /etc/udev/rules.d/
```

and add your user to the group, e.g., for user "pi":

```
$ sudo usermod -a -G stratopi pi
```

Reboot:

```
$ sudo reboot
```

You will find the directory /sys/class/stratopi/ which gives you access to Strato Pi CM's functionalities.

Installing the Real Time Clock software

The RTC is based on the Microchip MCP79410 module and is connected to the Raspberry Pi via its I²C serial bus.

Before downloading the installation utility, you should enable I²C and install the “i2c-tools” package.

To enable I²C, run the “raspi-config” configuration utility:

```
$ sudo raspi-config
```

Then go to “Interfacing Options”, “I2C” and select “yes” to enable the I²C interface, then reboot your Raspberry Pi.

To install the “i2c-tools” package:

```
$ sudo apt-get update
$ sudo apt-get install i2c-tools
```

With these prerequisite installs completed, you should download and run Strato Pi’s installation script:

```
$ cd
$ wget http://sferalabs.cc/files/strato/rtc-install
$ chmod 755 rtc-install
$ sudo ./rtc-install
```

If the script completes with no errors, delete the installation script and reboot:

```
$ rm rtc-install
$ sudo reboot
```

Testing the Real Time Clock

Assuming you are connected to the Internet and your Pi was able to reach a public NTP (Network Time Protocol) server, you should see the current date and time using the “date” command:

```
$ date
Thu Dec 10 18:02:32 CET 2015
```

Also check the date and time stored in the hardware clock:

```
$ sudo hwclock -r
Thu 10 Dec 2015 06:03:01 PM CET  -0.546570 seconds
```

If the returned date and time is not correct, or “hwclock” returns an error, use the “-w” option to set the hardware clock to the current time:

```
$ sudo hwclock -w
```

Then recheck the time stored in the hardware clock to ensure it matches. Linux may have failed to automatically update the hardware clock after the last reboot if its internal registers contained invalid values.

If the RTC still doesn’t work, you should check if the Pi sees the RTC chip on the I²C bus. Run these two commands:

```
$ sudo modprobe -r rtc_ds1307
$ sudo i2cdetect 1
WARNING! This program can confuse your I2C bus, cause data loss and worse!
I will probe file /dev/i2c-1.
I will probe address range 0x03-0x77.
Continue? [Y/n]
     0  1  2  3  4  5  6  7  8  9  a  b  c  d  e  f
00:          -- -- -- -- -- -- -- -- -- -- -- -- --
10: -- -- -- -- -- -- -- -- -- -- -- -- -- -- -- --
20: -- -- -- -- -- -- -- -- -- -- -- -- -- -- -- --
30: -- -- -- -- -- -- -- -- -- -- -- -- -- -- -- --
40: -- -- -- -- -- -- -- -- -- -- -- -- -- -- -- --
50: -- -- -- -- -- -- -- 57 -- -- -- -- -- -- -- --
60: -- -- -- -- -- -- -- -- -- -- -- -- -- -- -- 6f
70: -- -- -- -- -- -- -- —
```

You should see “6f” in the address list. This is the address of the RTC.

If the RTC address is detected, double check your software installation for issues at the Linux modules level.

Run the “lsmod” command to list the loaded modules and check that “i2c_dev” and “i2c_bcm2708” are both listed.

If the RTC address is not detected, the cause could be a hardware problem, on the Strato board or the Raspberry Pi. If you have another Pi or Strato board, try swapping them to isolate the faulty board.

Configuring the serial port

If you are using Strato Pi CM's serial port for your applications, you need to disable the Linux serial console, otherwise it will send console data to the serial port.

Disable the ttyAMA0 console service:

```
sudo systemctl disable serial-getty@ttyAMA0.service
```

Edit the /boot/cmdline.txt file and delete the serial console configuration:

```
console=serial0,115200
```

Using Strato Pi CM

Real Time Clock

Strato Pi CM has a hardware real time clock with a dedicated long-life non-rechargeable back-up battery.

Once the RTC modules and configuration files are properly installed, you will simply use the date and time commands to control the hardware clock.

Serial port

Strato Pi CM uses the Raspberry Pi standard UART TX/RX pins on the GPIO connector to implement a standard RS-485 port.

The RS-485 port is isolated from the Raspberry Pi's serial lines using dedicated opto-couplers and from the main power supply with a high-efficiency DC-DC converter. This configuration should prevent ground loops between devices connected through the serial line.

The RS-485 TX/RX switching is implemented automatically in the Strato Pi's micro-controller, based on speed and number of bits detection, and is completely transparent to the software controlling the UART on Raspberry Pi. See "Advanced configuration" below for alternative configurations.

The RS-485 line has 620 Ohm pull-up and pull-down resistors on lines A and B. The biasing resistors ensure that, during idle periods the data lines are kept at a stable voltage level and prevent false triggering of receiver input. These resistors can be disabled by removing jumpers JP1 and JP2 respectively.

A 100 Ohm termination resistor between A and B is connected when the J1 micro-switch is moved toward the terminal block.

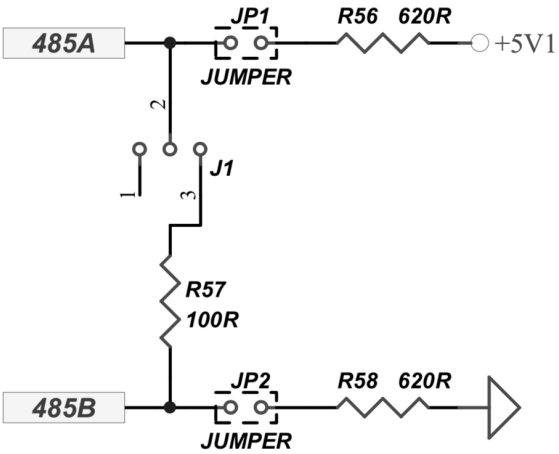

RS-485 JUMPERS AND SWITCH SCHEMATIC

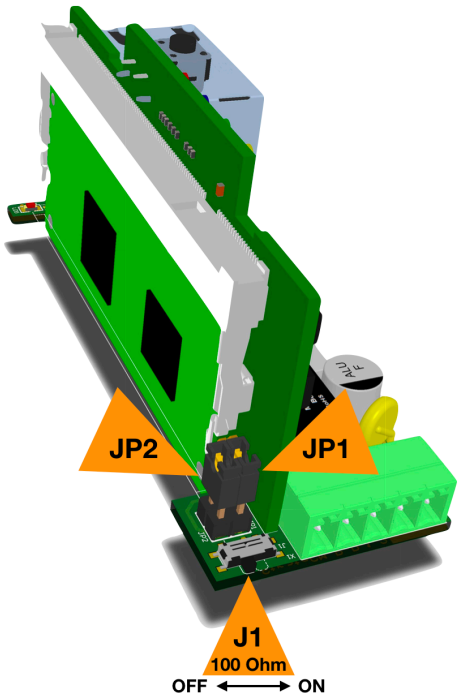

RS-485 JUMPERS AND SWITCH POSITION

Push button

There is a recessed push button that is easily accessible removing the front panel. When this button is pressed, the Strato Pi CM controller will set GPIO25 high, so that an application can easily detect it by simply polling this GPIO line.

Keeping the button pressed for more than 4 seconds, the blue LED will blink twice. Releasing the button after the blinks will initiate a delayed reset cycle (see below).

If the button is pressed for more than 10 seconds, the blue LED will start blinking continuously until released, and an immediate reset cycle will be initiated.

LED

Strato Pi CM has an on-board LED that can be controlled using GPIO16. Simply set GPIO16 to turn on the LED.

LED on continuously:

```
$ sudo strato led on
```

LED off:

```
$ sudo strato led off
```

LED on for 500 milliseconds:

```
$ sudo strato led 500
```

LED on for 500 milliseconds, followed by 100 milliseconds off, repeated three times:

```
$ sudo strato led 500 100 3
```

Hardware watchdog

Strato Pi CM implements a dedicated hardware watchdog circuit that can be used to perform the hardware reset of the Raspberry Pi Compute Module.

The watchdog is normally disabled. To enable it, set GPIO22 pin to high. While GPIO22 is high, the Strato Pi CM controller will watch for state changes of the GPIO27 heartbeat pin. You should ensure that GPIO27 flips its state between high and low faster than every 60 seconds.

If the Strato Pi CM controller doesn't see GPIO27 changing state for more than 60 seconds, it will initiate a shutdown procedure, rising the GPIO17 timeout pin to high, to signal that a watchdog timeout has occurred.

If possible, you should immediately initiate a software shutdown on Raspberry Pi Compute Module, and set the GPIO18 shutdown pin to high. When GPIO18 is set to high or 60 seconds after the timeout, Strato Pi CM will wait 60 seconds more, then reset the Raspberry Pi Compute Module (pulling the RUN line low).

Note that Strato Pi CM will reset the Raspberry Pi Compute Module even if GPIO18 is not set high. In this case the power cycles occurs 120 seconds after the heartbeat timeout.

See "Advanced configuration" below for alternative configurations.

Enable the watchdog:

```
$ sudo strato watchdog enable
```

Disable the watchdog:

```
$ sudo strato watchdog disable
```

Send the heartbeat:

```
$ sudo strato watchdog heartbeat
```

Print "1" if the watchdog timeout is expired, "0" if not:

```
$ sudo strato watchdog timeout; echo $?
```

Reset cycle

You can start a delayed reset cycle by rising Raspberry Pi's GPIO18 pin for at least one second.

When GPIO18 is set to high, Strato Pi CM will wait 60 seconds and then reset the Raspberry Pi Compute Module.

To initiate a delayed reset cycle:

```
$ sudo strato reset
```

Advanced configuration

The Strato Pi CM logic controller can be configured from the Raspberry Pi to change the default behavior and timing parameters of the hardware watchdog and the power cycle functionalities.

The RX/TX switching mode (TX-Enable control) of the RS-485 serial port is also configurable. Other than the default automatic switching, passive mode as well as fixed serial parameters settings are available.

These configuration parameters can be accessed using the Strato Pi kernel module or implementing the underlying ASCII-based serial protocol described in the "Strato Pi Logic Controller Advanced Configuration Guide" document.

Block diagram

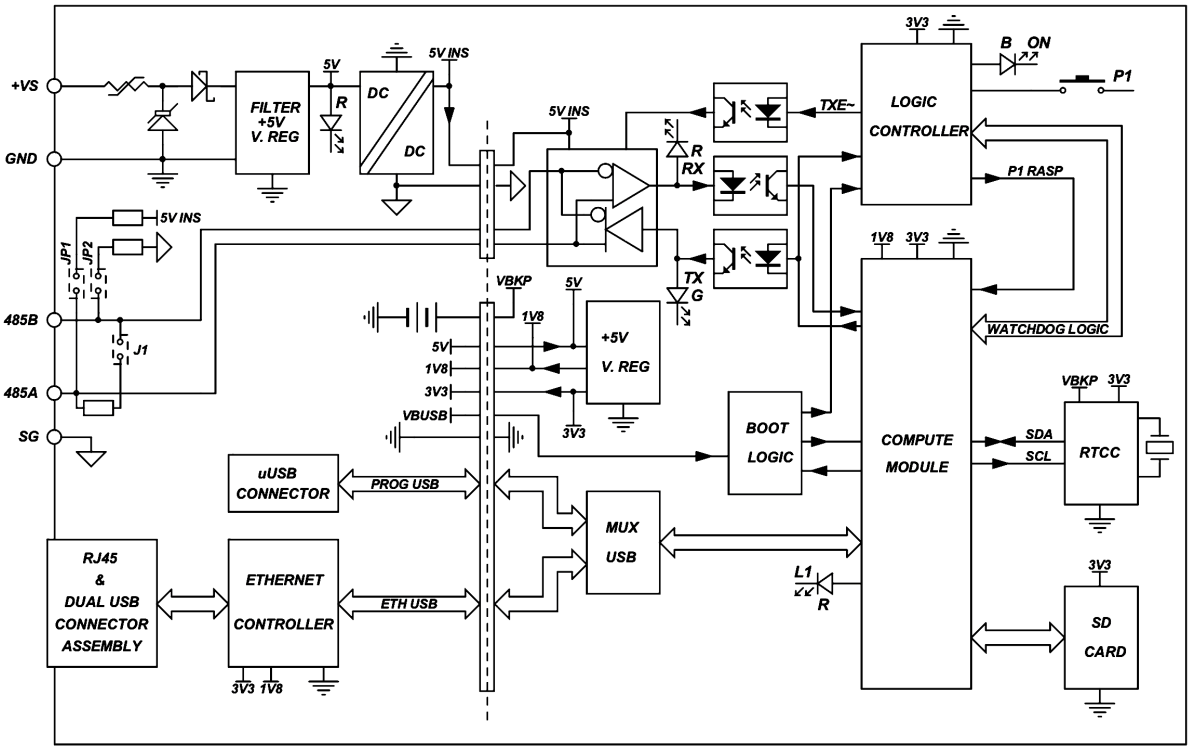

STRATO PI CM BLOCK DIAGRAM

Technical specifications

Power supply	9-28V⎓ (VDC) Reverse polarity protection with 1.1A resettable fuse. Surge protection up to ±1000V/2ohms 1.2/50µs
Current consumption at VS+ 12V⎓ including Raspberry Pi CM current, with low CPU/GPU load and no USB devices connected	140mA w/o Ethernet and RS-485 160mA with Ethernet and RS-485 Actual current consumption may vary based on working conditions
Current consumption at VS+ 24V⎓ including Raspberry Pi CM current, with low CPU/GPU load and no USB devices connected	80mA w/o Ethernet and RS-485 100mA with Ethernet and RS-485 Actual current consumption may vary based on working conditions
Raspberry platform compatibility	Raspberry Pi Compute Module 1 Raspberry Pi Compute Module 3 Raspberry Pi Compute Module 3 Lite Raspberry Pi Compute Module 3+ 8GB Raspberry Pi Compute Module 3+ 16GB Raspberry Pi Compute Module 3+ 32GB Raspberry Pi Compute Module 3+ Lite (tested with Pi Compute Module 3 for regulatory compliance)
Serial communication port	RS-485 Half-Duplex with automatic data direction management
Serial port baud rates	1200 to 115200
ESD-Protection Voltage on RS-485 A/B	±15kV human body model ±8kV contact discharge
Surge protection on RS-485 A/B	Surge protection up to ±500V/2ohms 1.2/50µs; 600W peak pulse power capability at 10/1000µs waveform
Fail safe feature on RS-485	Yes
Real time clock	Internal RTCC circuit with backup lithium battery. Only use CR1025 Lithium / Manganese Dioxide (Li/MnO2) batteries. Expected battery life without main power supply: ~2 years
Housing	standard 2M for DIN rail
Operating temperature	CM1, CM3: 0…+50 °C CM3+: 0…+60 °C
Storage temperature	-20…+70 °C
Protection degree	IP20
Weight	150 g (including Raspberry Pi Compute Module 3)

Dimensions

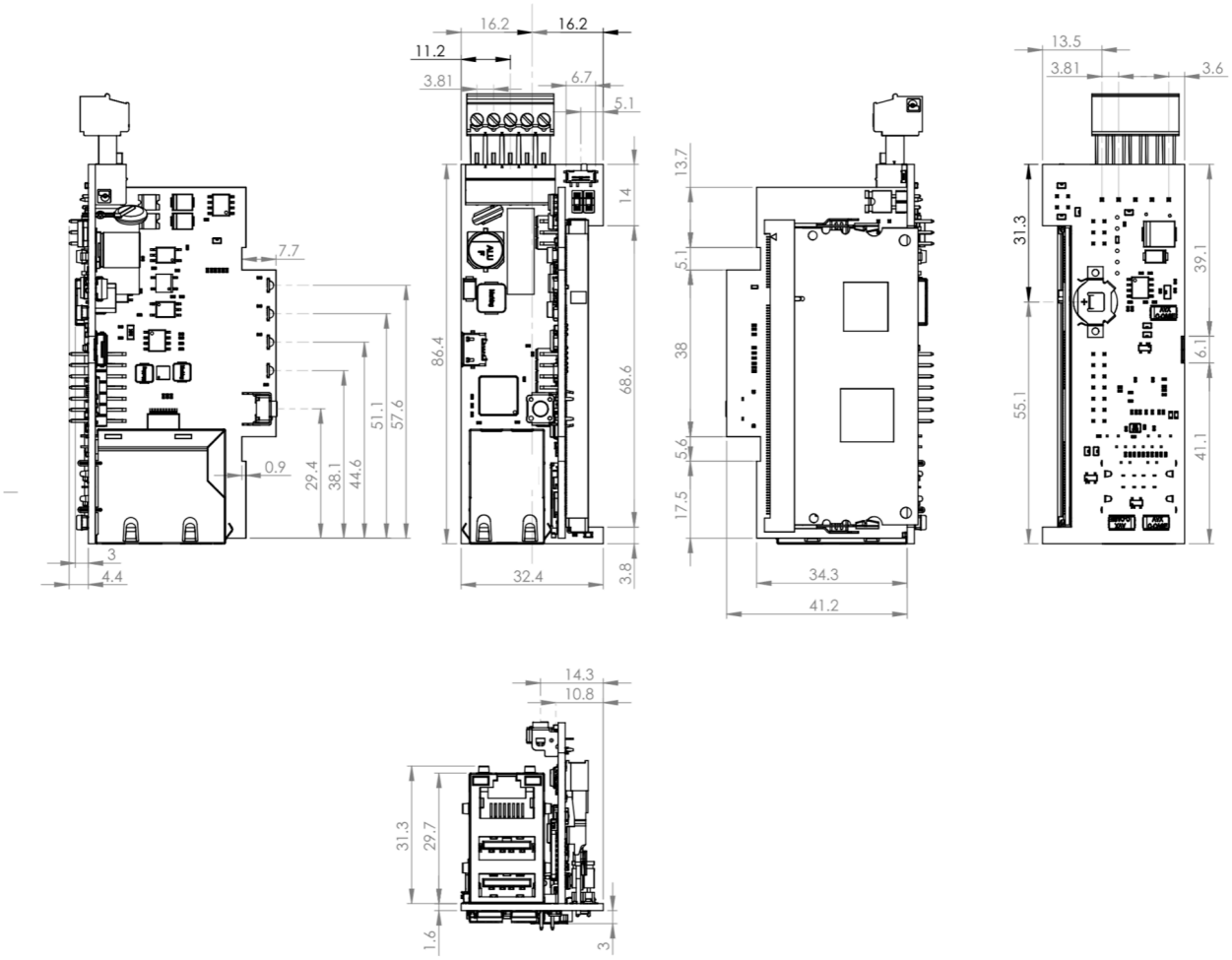

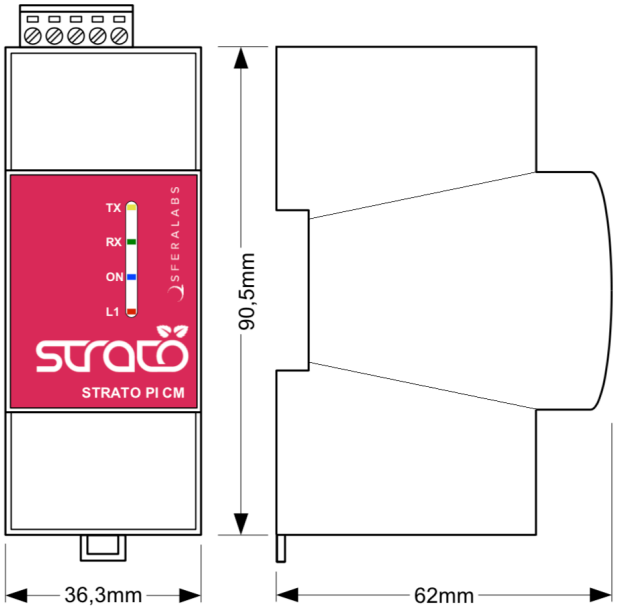

DIMENSIONS (mm)

Disposal

Waste Electrical & Electronic Equipment

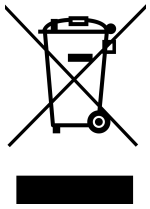

(Applicable in the European Union and other European countries with separate collection systems). This marking on the product, accessories or literature indicates that the product should not be disposed of with other household waste at the end of their working life. To prevent possible harm to the environment or human health from uncontrolled waste disposal, separate these items from other types of waste and recycle them responsibly to promote the sustainable reuse of material resources. Household users should contact either the retailer where they purchased this product, or their local government office, for details of where and how they can take these items for environmentally safe recycling. This product and its electronic accessories should not be mixed with other commercial wastes for disposal.

Strato Pi CM contains a small non rechargeable manganese dioxide lithium coin battery.

In the Strato Pi CM, the battery is not accessible from the outside. You should first remove the case body to gain access to the Strato Pi CM circuit board. Always remove the battery before disposing of this product.

Installation and use restrictions

Standards and regulations

The design and the setting up of electrical systems must be performed according to the relevant standards, guidelines, specifications and regulations of the relevant country. The installation, configuration and programming of the devices must be carried out by trained personnel.

The installation and wiring of connected devices must be performed according to the recommendations of the manufacturers (reported on the specific data sheet of the product) and according to the applicable standards.

All the relevant safety regulations, e.g. accident prevention regulations, law on technical work equipment, must also be observed.

Safety instructions

Carefully read the safety information section at the beginning of this document.

Set-up

For the first installation of the device proceed according to the following procedure:

- ✓ make sure all power supplies are disconnected
- ✓ install and wire the device according to the schematic diagrams on the specific product user guide
- ✓ after completing the previous steps, switch on the power supply and other related circuits.

Conformity Information

EU

This device complies with the essential requirements of the following directives and harmonised standards:

- ✓ 2014/30/UE (EMC)
- ✓ EN61000-6-2:2005 (EMC Immunity)
- ✓ EN61000-6-4:2007 (Emission for industrial environments)
- ✓ 2011/65/UE (RoHS)

The declaration of conformity is available on the internet at the following address: https://www.sferalabs.cc/strato-pi/