Strato Pi CM Duo v3 User Guide

June 2026

Revision 035

SCMD30XS	*Strato Pi CM Duo v3 Solo*
SCMD30XPL	*Strato Pi CM Duo v3 3+ Lite 1GB RAM*
SCMD30XP1	*Strato Pi CM Duo v3 3+ 1GB RAM, 8GB eMMC*
SCMD30XP2	*Strato Pi CM Duo v3 3+ 1GB RAM, 16GB eMMC*
SCMD30XP3	*Strato Pi CM Duo v3 3+ 1GB RAM, 32GB eMMC*
SCMD30X4L	*Strato Pi CM Duo v3 4S Lite 1GB RAM*
SCMD30X41	*Strato Pi CM Duo v3 4S 1GB RAM, 8GB eMMC*
SCMD30X42	*Strato Pi CM Duo v3 4S 1GB RAM, 16GB eMMC*
SCMD30X43	*Strato Pi CM Duo v3 4S 1GB RAM, 32GB eMMC*
SCMD30X4L4	*Strato Pi CM Duo v3 4S Lite 4GB RAM*
SCMD30X434	*Strato Pi CM Duo v3 4S 4GB RAM, 32GB eMMC*
SCMD30X438	*Strato Pi CM Duo v3 4S 8GB RAM, 32GB eMMC*

SFERALABS

Safety information 4
- Qualified personnel 4
- Hazard levels 4
- Safety instructions 5
  - General safety instructions 5
  - Battery 6

Introduction 7

Features 8

Device identification 9

Hardware Setup 10
- Opening the case 10
- Closing the case 11
- Raspberry Pi Compute Module installation 11
- How to flash the eMMC 12
- microSD installation 12
- Replacing the RTC backup battery 13
- Terminal block 14
- Power supply 14
- Dedicated GPIO pins 15

Software installation and configuration 17
- Installing the Strato Pi kernel module 17
- Enabling the second SD interface 17
- Installing the Real Time Clock driver 18
- Configuring the serial port 18

Using Strato Pi CM Duo 19
- Real Time Clock 19
- RS-485 serial port 19
- SD matrix 20
- USB ports power management 22
- Secure element 23
- Push button 24
- LED 24
- Hardware watchdog 24
- Reset cycle 24
- Advanced configuration 25

Block diagram 26

Technical specifications 27
Dimensions 29
Disposal 30
Installation and use restrictions 30
Standards and regulations 30
Safety instructions 30
Set-up 30
Conformity Information 31
EU 31
USA 31
CANADA 32
RCM AUSTRALIA / NEW ZEALAND 32

Before opening the Strato Pi CM Duo enclosure, disconnect all power sources and any connection to external devices, including USB and Ethernet cables.

Follow all applicable electrical safety standards, guidelines, specifications and regulations for installation, wiring and operations of Strato Pi CM Duo.

Carefully read this user guide before installation.

Strato Pi CM Duo is not authorised for use in safety-critical applications where a failure of the product would reasonably be expected to cause personal injury or death. Safety-critical applications include, without limitation, life support devices and systems, equipment or systems for the operation of nuclear facilities and weapons systems. Strato Pi CM Duo is neither designed nor intended for use in critical military or aerospace applications or environments and for automotive applications or environment. Customer acknowledges and agrees that any such use of Strato Pi CM Duo is solely at Customer's risk, and that Customer is solely responsible for compliance with all legal and regulatory requirements in connection with such use.

Sfera Labs S.r.l. may make changes to specifications and product descriptions at any time, without notice. The product information on the web site or materials is subject to change without notice.

Please download and read the Sfera Labs Terms and Conditions document available at:

https://www.sferalabs.cc

Strato and Sfera Labs are trademarks of Sfera Labs S.r.l. Other brands and names may be claimed as the property of others.

Copyright © 2019-2026 Sfera Labs S.r.l. All rights reserved.

Safety information

Carefully and fully read this user guide before installation and retain it for future reference.

Qualified personnel

The product described in this manual must be operated only by personnel qualified for the specific task and installation environment, in accordance with all relevant documentation and safety instructions. A qualified person should be capable of fully identifying all installation and operation risks and avoid potential hazards when working with this product.

Hazard levels

This manual contains information you must observe to ensure your personal safety and prevent damage to property. Safety information in this manual are highlighted by the safety symbols below, graded according to the degree of danger.

DANGER

Indicates a hazardous situation which, if not avoided, **will** result in death or serious personal injury.

WARNING

Indicates a hazardous situation which, if not avoided, **may** result in death or serious personal injury.

CAUTION

Indicates a hazardous situation which, if not avoided, can result in minor or moderate personal injury.

NOTICE

Indicates a situation which, if not avoided, can result in damage of property.

Safety instructions

General safety instructions

Protect the unit against moisture, dirt and any kind of damage during transport, storage and operation. Do not operate the unit outside the specified technical data.

Never open the housing. If not otherwise specified, install in closed housing (e.g. distribution cabinet). Earth the unit at the terminals provided, if existing, for this purpose. Do not obstruct cooling of the unit. Keep out of the reach of children.

WARNING

Life threatening voltages are present within and around an open control cabinet.

When installing this product in a control cabinet or any other areas where dangerous voltages are present, always switch off the power supply to the cabinet or equipment.

WARNING

Risk of fire if not installed and operated properly.

Follow all applicable electrical safety standards, guidelines, specifications and regulations for installation, wiring and operations of this product.

The Raspberry Pi Compute Module board could generate a substantial amount of heat when the software forces the CPU and/or GPU to operate at high load levels. Ensure that the product is properly installed and ventilated to prevent overheat.

NOTICE

The connection of expansion devices to this product may damage the product and other connected systems, and may violate safety rules and regulations regarding radio interference and electromagnetic compatibility.

Use only appropriate tools when installing this product. Using excessive force with tools may damage the product, alter its characteristics or degrade its safety.

Battery

This product uses a small lithium non-rechargeable battery to power its internal real time clock (RTC).

WARNING

Improper handling of lithium batteries can result in an explosion of the batteries and/or release of harmful substances.

Worn-out or defective batteries can compromise the function of this product.

Replace the RTC lithium battery before it is completely discharged. The lithium battery must be replaced only with an identical battery. See the "Replacing the RTC backup battery" section for instructions.

Do not throw lithium batteries into fire, do not solder on the cell body, do not recharge, do not open, do not short-circuit, do not reverse polarity, do not heat above 100°C and protect from direct sunlight, moisture and condensation.

Dispose of used batteries according to local regulations and the battery manufacturer's instructions.

Introduction

Strato Pi CM Duo v3 is a compact and powerful industrial server based on the Raspberry Pi Compute Module, designed for professional and industrial applications where reliability and service continuity are essential. It is housed in a 2-module DIN-rail enclosure.

It is available in several versions:

- Strato Pi CM Duo v3 3+, with a Raspberry Pi Compute Module 3+ pre-installed
- Strato Pi CM Duo v3 4S, with a Raspberry Pi Compute Module 4S pre-installed
- Strato Pi CM Duo v3 Solo, without a Compute Module, compatible with all current versions: 1, 3, 3+, and 4S

The information in this manual applies to all Strato Pi CM Duo v3 versions. The products are identical except for the installed Compute Module model.

This manual generally refers to all versions as Strato Pi CM Duo.

Features

Strato Pi CM Duo, all versions:

- 9-28 Vdc power supply, with surge and reverse polarity protection, and 1.1 A resettable fuse
- up to 1.9 A max continuous current (3 A peaks) to the 5 V Raspberry Pi Compute Module power supply input pins (at 24 Vdc)
- highly accurate real time clock with temperature compensated crystal oscillator (TCXO) and replaceable CR1220 Lithium/Manganese Dioxide back-up battery
- standard RS-485 interface to the Raspberry Pi serial line, with opto-isolator and electrostatic discharge protection
- 10/100 Ethernet port
- two USB 2.0 type-A ports, with individual power control and fault detection
- dual microSD card architecture. Strato Pi CM routes its two microSD card holders to the Compute Module through a high-speed switching matrix, controlled by the on-board micro-controller. Each SD card can be set as the boot card, with the other available as additional storage. This enables for separate OS/data storage, SD redundancy and in-field full-system upgrades. The microSD slots are hidden, and can be accessed opening the case
- hardware watchdog, fully independent from the Raspberry Pi Compute Module, controlled via the GPIO pins of the Raspberry Pi board and acting on the Raspberry Pi Compute Module hardware reset line. The hardware watchdog can also control the microSD switch matrix, swapping the boot card in case the watchdog is triggered
- integrated boot loader for the Strato Pi micro-controller, allowing in-field firmware upgrades directly from the Raspberry Pi
- embedded Microchip ATECC608 secure element chip
- front-panel LEDs for power supply, serial line activity, and one GPIO-controlled LED
- recessed push-button, hidden behind the front-panel, connected to a GPIO pin
- power supply and serial connections on a pluggable terminal block
- packaged in a compact 2 modules DIN-rail case
- UL certified (UL FILE E526642 PROCESS CONTROL EQUIPMENT)

Strato Pi CM Duo v3 Solo:

- compatible with Raspberry Pi Compute Module 1, 3, 3+, and 4S

Strato Pi CM Duo v3 3+:

- pre-installed and tested Raspberry Pi Compute Module 3+

Strato Pi CM Duo v3 4S:

- pre-installed and tested Raspberry Pi Compute Module 4S

Device identification

The device can be identified with the information provided in the rating and identification plate, permanently attached to the side of the case.

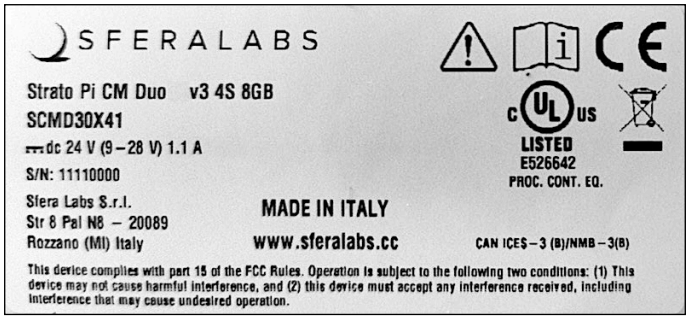

EXAMPLE RATING AND IDENTIFICATION PLATE

Hardware Setup

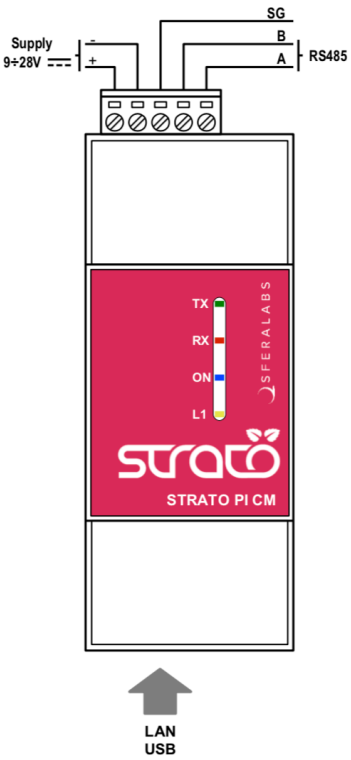

STRATO PI CM DUO CONNECTION DIAGRAM

For the initial setup, it may be necessary to open the plastic DIN-rail enclosure, for example to install the Compute Module in the Strato Pi CM Duo Solo, insert the SD card(s), or adjust the RS-485 termination and pull resistor configuration. Refer to the following sections for details.

Opening the case

NOTICE

Before opening the Strato Pi CM Duo enclosure, disconnect all power sources and any connection to external devices, including USB and Ethernet cables.

Follow the steps below in the exact order:

1. Remove the green pluggable terminal block
2. Remove the black plastic DIN-rail hook
3. Using a small flat screwdriver, gently separate the bottom case and board assembly from the top cover. Lift the side next to the DIN-rail hook first
4. Slide the circuit board assembly out of the case. It is mechanically secured only by the bottom part of the enclosure

Closing the case

5. Insert the circuit board assembly back into the case, ensuring that the USB and Ethernet connectors are properly aligned with the openings
6. Refit the bottom part of the case by inserting the side opposite the DIN-rail hook first, then gently press the other side into place
7. Reinstall the black plastic DIN-rail hook.

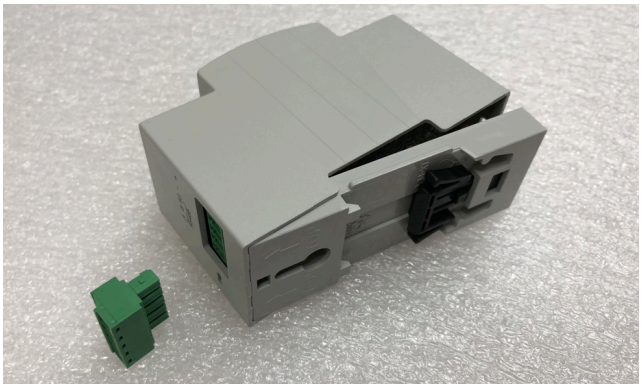

OPENING AND CLOSING THE CASE

Raspberry Pi Compute Module installation

To install your own Compute Module in Strato Pi CM Duo Solo, or replace the pre-installed module, no tools are required. The Compute Module fits in a standard 200 pin DDR2 SODIMM (JEDEC MO-224 mechanical specification) slot.

NOTICE

Static electricity can damage the components in your system. To protect your system's components from static damage during the installation process, touch any of the unpainted metal surfaces on your computer's frame or wear an ESD wrist strap before handling internal components. Either method will safely discharge static electricity that's naturally present in your body.

When handling the Raspberry Pi Compute Module, be sure to hold it along the side edges using your thumb and index finger. Avoid touching the components and pin connectors as damage can occur.

Align the notches on the Compute Module with the ridges in the DDR2 slot. Insert the module using firm and even pressure, and push down on the module until the clips on the side of the slot snap into place.

How to flash the eMMC

In order to flash the Compute Module's eMMC memory, an additional board, like the *Compute Module IO Board V3*, shall be used. Use the latest RPIBOOT utility from Raspberry Pi and refer to its documentation[1] for installation and usage details.

Alternatively, if using the Compute Module 4S (or a Compute Module 3/3+ with *USB host boot mode* previously enabled[2]) you can boot the unit from USB[3], access via SSH, and flash the eMMC which will be available as a local mass storage device.

microSD installation

Strato Pi CM Duo has two microSD slots to install flash memory cards.

When the Compute Module Lite is installed, as it lacks an internal eMMC chip, one of the two microSD slots will be used as the boot SD card, just like with a Raspberry Model B board. The other microSD can be used as additional storage. Dedicated commands to the micro-controller allow to select which slot is used for boot, and if the other is enabled or not.

When a Compute Module with embedded eMMC is installed, both microSD slots can be used as additional storage. You can only access one SD card at a time, but the active card can be selected sending the appropriate commands to the micro-controller.

The microSD slots are not directly accessible with the case closed. The slots are located on the vertical board, next to the USB/Ethernet modular connector.

The bottom slot is SDA, and the top is SDB.

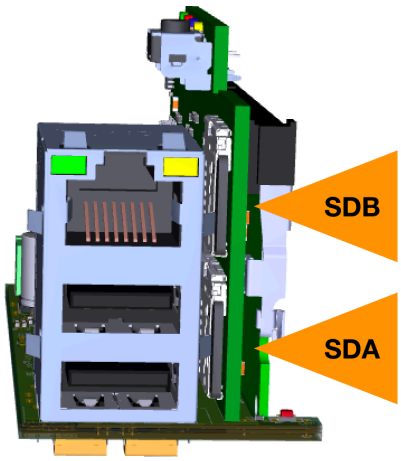

MICRO SD SLOTS

[1] https://www.raspberrypi.com/documentation/computers/compute-module.html#flashing-the-compute-module-emmc

[2] https://www.raspberrypi.com/documentation/computers/raspberry-pi.html#usb-host-boot-mode

[3] https://www.raspberrypi.com/documentation/computers/raspberry-pi.html#booting-from-usb-mass-storage

Replacing the RTC backup battery

Strato Pi CM Duo includes a hardware real-time clock (RTC) powered by a dedicated long-life, non-rechargeable backup battery.

The device is shipped with a CR1220[4] Lithium/Manganese Dioxide (Li/MnO_2) battery pre-installed. This battery powers the RTC only when the main supply is not available. Depending on operating and environmental conditions, it is expected to last three or more years if the device remains unpowered for extended periods, or up to the battery's nominal lifetime when external power is regularly applied.

The battery is not externally accessible. To replace it, first remove the enclosure to access the internal circuit board assembly. Follow the procedure described below to open the case.

WARNING

Improper handling of lithium batteries can result in an explosion of the batteries and/or release of harmful substances.

Worn-out or defective batteries can compromise the function of this product.

KEEP OUT OF REACH OF CHILDREN. Swallowing may lead to serious injury or death in as little as 2 hours due to chemical burns and potential perforation of the esophagus. Immediately see doctor.

Replace the RTC lithium battery before it is completely discharged. Replace the battery every 5 years even if the battery is still working properly. The lithium battery must be replaced only with an identical battery.

Do not throw lithium batteries into fire, do not solder on the cell body, do not recharge, do not open, do not short-circuit, do not reverse polarity, do not heat above 100°C and protect from direct sunlight, moisture and condensation.

Dispose of used batteries according to local regulations and the battery manufacturer's instructions.

Once the circuit board assembly has been removed from the enclosure, use a non-conductive pin or small tool to carefully extract the battery from its holder. Insert the new battery with a gentle push; no tools are required for installation, as it is secured by a spring contact.

Ensure that the negative (–) terminal faces the circuit board and makes contact with the central pad of the battery holder, as shown in the image below.

The real-time clock will immediately reset when the backup battery is disconnected.

[4] BR1220 batteries (Lithium Poly-carbonmonofluoride) can also be used (not UL evaluated), for improved shelf and service life.

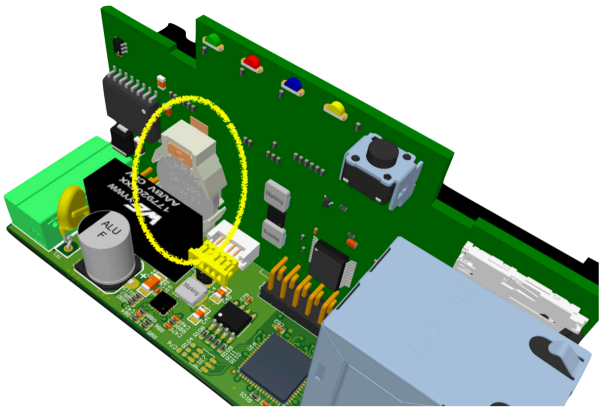

RTC BACKUP BATTERY HOLDER

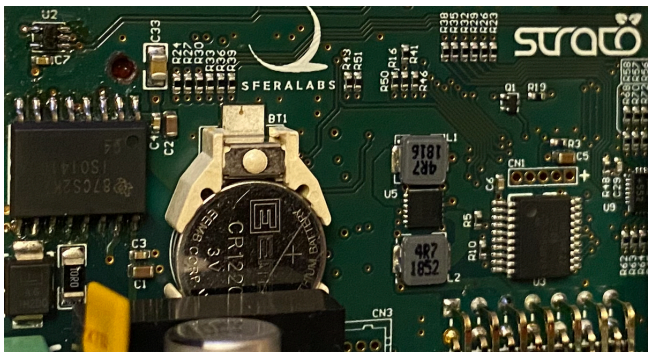

RTC BACKUP BATTERY INSTALLED

Terminal block

Strato Pi CM Duo has a 5 positions terminal block for power and serial connections.

The maximum conductor cross section is 1.5 mm² (16 AWG), or 0.5 mm² when using ferrules (highly recommended). Recommended stripping length is 5 mm. Screw thread is M2. Never exceed 0.25 Nm torque when tightening the screws.

Power supply

Strato Pi CM Duo must be powered with DC voltage only:

- **DC input voltage range**: 9.0 V to 28.0 V
- **Maximum input current**: 1.1 A

Ensure correct polarity (+ / –) when connecting the power supply. The power supply circuit implements reverse polarity protection using auto resetting fuses and surge protection. The resetting fuse threshold is 1.1 A at 20 °C ambient temperature.

The blue "ON" LED, also visible through the front panel of the DIN-rail case, is lit when power supply is available. This LED blinks while the Compute Module boot process is in progress.

The Strato Pi CM Duo power supply stage is optimised to deliver up to 1.9 A at 5 V to the Raspberry Pi Compute Module.

The voltage regulator can supply up to 3.0 A, 5 V output short duration current peaks (< 1 sec).

Because Strato Pi CM Duo has a 1.1 A resettable fuse (polyfuse) on the power supply line, the maximum current that its regulator can deliver is also limited by this fuse, and depends on the input voltage.

The following table lists the typical measured output current of the power supply stage at different input voltages, and the corresponding input current. At high input voltage levels, the voltage regulator's thermal protection becomes the limiting factor.

		9V	12V	24V
Iout	**Vout**	**Iin**	**Iin**	**Iin**
0.1	5.00	0.07	0.06	0.03
0.5	4.98	0.33	0.25	0.13
1	4.95	0.69	0.50	0.25
1.3	4.93	0.93	0.66	0.33
1.5	4.92	1.11 FUSE	0.77	0.39
1.6	4.91		0.83	0.41
1.7	4.91		0.89	0.44
1.8	4.91		0.95	0.47
1.9	4.91		1.01	0.50
2	4.91		1.08 REG	0.54 REG

POWER SUPPLY STAGE TYPICAL IN/OUT VOLTAGE AND CURRENT[5]

Dedicated GPIO pins

Strato Pi CM Duo uses some of the Raspberry Pi Compute Module GPIO pins. These pins should not be used for other functions.

GPIO pin	Direction	Description
GPIO2/SDA		I²C SDA line for the real time clock
GPIO3/SCL		I²C SCL line for the real time clock
GPIO14/TXD	out	serial TX line
GPIO15/RXD	in	serial RX line
GPIO32	out	cycle high/low for watchdog heartbeat
GPIO39	out	set to high to enable the watchdog
GPIO17	in	high on watchdog timeout
GPIO18	out	set to high to enable the shutdown cycle
GPIO16	out	set to high to turn on LED L1

[5] FUSE marks the level where the polyfuse opens to limit input current; REG is the voltage regulator's thermal protection limit.

GPIO pin	Direction	Description
GPIO38	in	high when P1 button pressed
GPIO37	out	soft serial TX for Strato MCU configuration
GPIO33	in	soft serial RX for Strato MCU configuration
GPIO30	out	set to low to enable USB1 (bottom) power
GPIO0	in	low on USB1 fault
GPIO31	out	set to low to enable USB2 (top) power
GPIO1	in	low on USB2 fault
GPIO6	out	expansion bus enable (reserved for future use)
GPIO34	in/out	expansion bus aux/act line (reserved for future use)

Software installation and configuration

All features of Strato Pi CM Duo are controlled via dedicated GPIO, the I²C bus and a soft serial RX/TX interface to the embedded micro-controller and can be used with most operating systems and programming languages.

The following software installation notes are based on the Raspberry Pi OS (formerly Raspbian) operating system.

Installing the Strato Pi kernel module

The Strato Pi kernel module can be used to easily access Strato Pi CM Duo's features via sysfs file system.

For updated information, further details and examples, please visit:

https://github.com/sfera-labs/strato-pi-kernel-module

Refer to the following instructions only if the above link is not accessible.

Download and install:

```
$ sudo apt install git raspberrypi-kernel-headers
$ git clone --depth 1 --recursive https://github.com/sfera-labs/strato-pi-kernel-module.git
$ cd strato-pi-kernel-module
$ make
$ sudo make install
$ dtc -@ -Hepapr -I dts -O dtb -o stratopi.dtbo stratopi.dts
$ sudo cp stratopi.dtbo /boot/overlays/
```

Add the following line to config.txt:

```
dtoverlay=stratopi
```

Optionally, to be able to use the sysfs files not as super user, create a new group "stratopi" and set it as the module owner group by adding an udev rule:

```
$ sudo groupadd stratopi
$ sudo cp 99-stratopi.rules /etc/udev/rules.d/
```

and add your user to the group, e.g., for user "pi":

```
$ sudo usermod -a -G stratopi pi
```

Reboot:

```
$ sudo reboot
```

You will find the directory /sys/class/stratopi/ which gives you access to Strato Pi CM Duo's functionalities.

Enabling the second SD interface

The SD1 interface must be enabled with the following line in the config.txt file:

```
dtoverlay=sdio,bus_width=4,poll_once=off
```

Installing the Real Time Clock driver

The RTC is based on the NXP PCF2131 RTC module and is connected to the Raspberry Pi via its I²C serial bus.

For updated information, further details and examples, please visit:

https://github.com/sfera-labs/rtc-pcf2131

Refer to the following instructions only if the above link is not accessible.

Download and install:

```
$ sudo apt install git raspberrypi-kernel-headers
$ git clone --depth 1 https://github.com/sfera-labs/rtc-pcf2131
$ cd rtc-pcf2131
$ make
$ sudo make install
$ dtc -@ -Hepapr -I dts -O dtb -o rtc-pcf2131.dtbo rtc-pcf2131.dts
$ sudo cp rtc-pcf2131.dtbo /boot/overlays/
```

Add the following line to config.txt:

```
dtoverlay=rtc-pcf2131
```

Reboot:

```
$ sudo reboot
```

Configuring the serial port

By default, the Linux serial console is active on the main UART (/dev/ttyAMA0). If you are using the RS-485 interface for your applications, you should disable it to avoid console data being sent to the serial port.

To disable the ttyAMA0 console service, run:

```
$ sudo systemctl disable serial-getty@ttyAMA0.service
```

and edit the cmdline.txt file to delete the serial console configuration:

```
console=serial0,115200
```

Using Strato Pi CM Duo

Real Time Clock

Strato Pi CM Duo has a hardware real time clock with a dedicated long-life non-rechargeable back-up battery.

Once the RTC driver is properly installed, you will simply use the date and time commands to control the hardware clock.

RS-485 serial port

Strato Pi CM Duo uses the Raspberry Pi standard UART TX/RX pins on the GPIO connector to implement a standard RS-485 port.

The RS-485 port is isolated from the Raspberry Pi's serial lines using dedicated opto-couplers and from the main power supply with a high-efficiency DC-DC converter. This configuration should prevent ground loops between devices connected through the serial line.

The RS-485 TX/RX switching is implemented automatically in the Strato Pi's micro-controller, based on speed and number of bits detection, and is completely transparent to the software controlling the UART on Raspberry Pi. It can also be manually configured to work with fixed communication parameters (speed, bits, parity, stop bits) or in passive mode (refer to the "Strato Pi Logic Controller Advanced Configuration Guide" document for additional information).

The RS-485 line has 620 Ohm pull-up and pull-down resistors on lines A and B. The biasing resistors ensure that, during idle periods the data lines are kept at a stable voltage level and prevent false triggering of receiver input. These resistors can be disabled by removing jumpers JP1 and JP2 respectively.

A 100 Ohm termination resistor between A and B is connected when the J1 micro-switch is moved toward the terminal block.

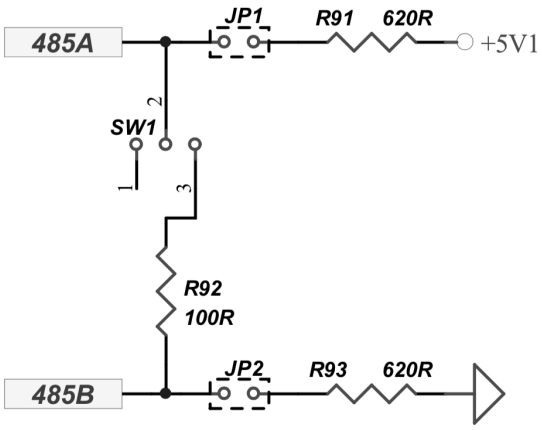

RS-485 JUMPERS AND SWITCH SCHEMATIC

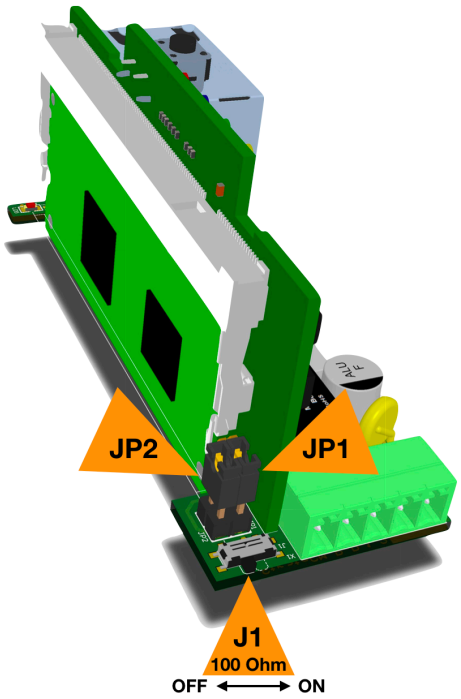

RS-485 JUMPERS AND SWITCH POSITION

SD matrix

Strato Pi CM Duo implements a flexible dual microSD card architecture.

Strato Pi CM routes its two microSD card holders to the Compute Module through a high-speed switching matrix, controlled by the on-board micro-controller. Each SD card can be set as the boot card, with the other available as additional storage.

This enables for separate OS/data storage, SD redundancy and in-field full-system upgrades.

The BCM283x in the Raspberry Pi Compute Module supports two SD card interfaces, SD0 and SD1.

The first (SD0) is a proprietary Broadcom controller that does not support SDIO and is the primary interface used to boot and talk to the eMMC or SDX signals. The CM will always try to boot from this interface first.

The second interface (SD1) is standards compliant and can interface to SD, SDIO and eMMC devices.

Both interfaces can support speeds up to 50MHz single ended (SD High Speed Mode), and this speed is supported by the Strato Pi CM Duo SD matrix as well.

Strato Pi CM Duo has two microSD slots, called SDA (bottom) and SDB (top), and the SD matrix allows 2x2 connections between both SDX/SD1 interfaces and the SDA/SDB slots.

NOTICE

Disconnecting an SD card from the Compute Module's SD interfaces when partitions from the card are mounted at the operating system level, can result in file system and data corruption. The Strato Pi matrix and the micro-controller don't check for card usage and don't provide any safety mechanism to prevent improper disconnection of the SD cards.

The matrix is controlled by three I/O lines of the Strato Pi micro-controller: RA5 (SDX enable), RC0 (SD1 enable) and RA4 (SDA/SDB switch). These lines are managed using the micro controller serial protocol and the Strato Pi kernel driver for Linux. The matrix has a hardware default configuration so that, when the micro-controller lines are high-impedance, it has a stable configuration, with SDX connected to SDA and SD1 not connected.

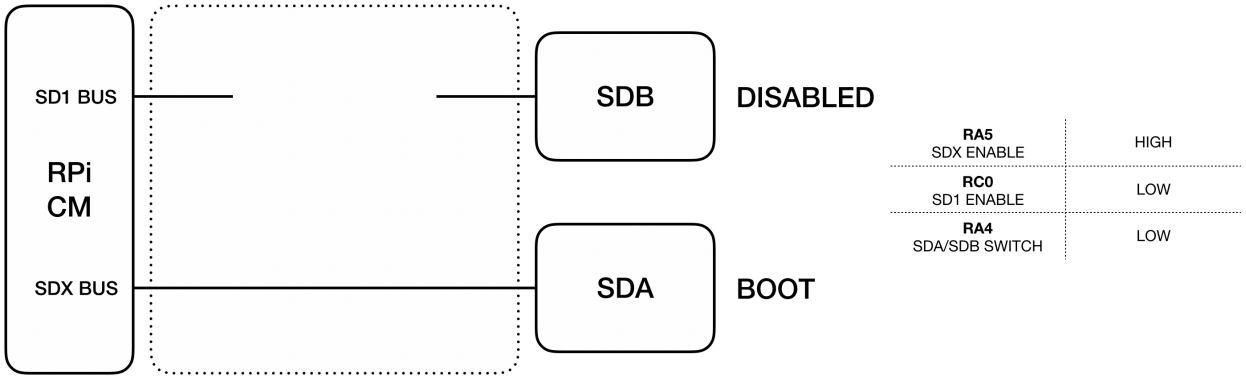

SD MATRIX DEFAULT CONFIGURATION

With SDA used as the boot card, SDB can be connected to the SD1 interface, and used as additional storage.

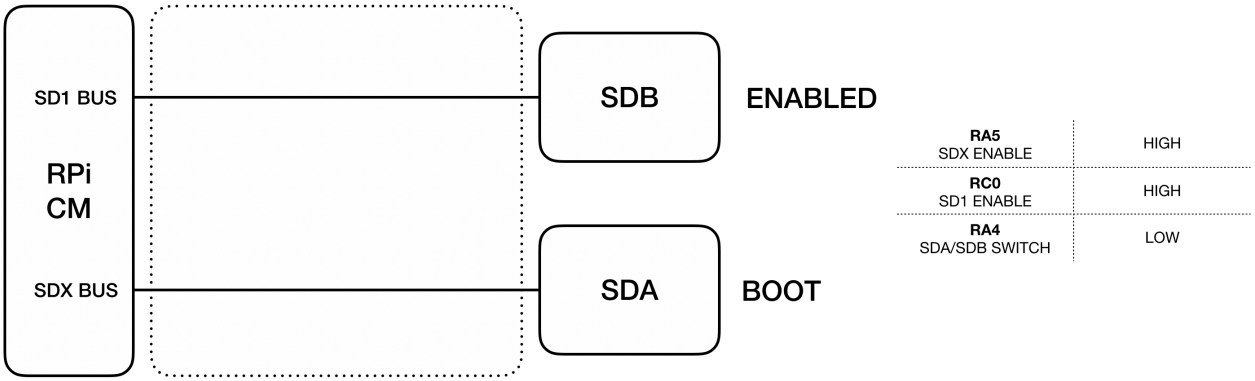

SD MATRIX BOOT FROM SDA AND SDB ENABLED FOR ADDITIONAL STORAGE

The SDX interface can be connected to SDB instead of SDA, so that boot will be done from SDB.

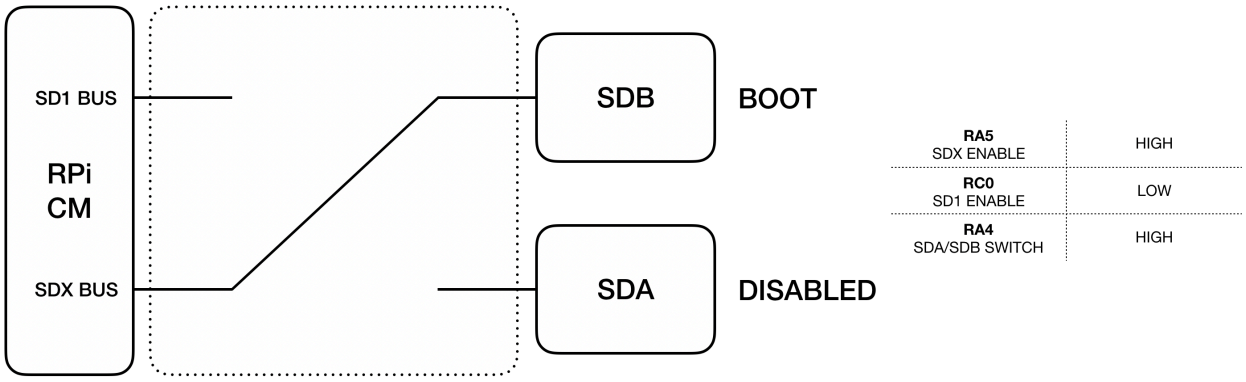

SD MATRIX BOOT FROM SDB

Finally, with the SDX interface connected to SDB for boot, the SDA slot can be enabled to be used for additional storage.

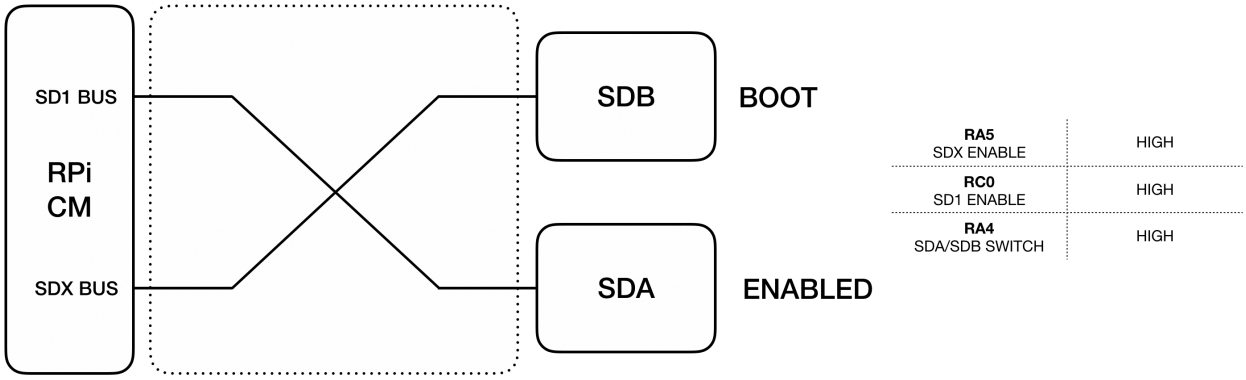

SD MATRIX BOOT FROM SDB AND SDA ENABLED FOR ADDITIONAL STORAGE

It is also possible to disable both the SDX and SD1 interfaces. This configuration could be used with the Compute Module versions that have the embedded eMMC storage, when no external SD card is needed.

USB ports power management

Strato Pi CM Duo has two USB ports, USB1 (bottom) and USB2 (top).

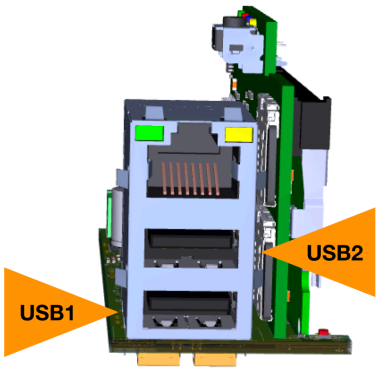

USB PORTS

Both ports are individually controlled by a dedicated power switch with over-current protection. The power switch is internally current limited and has thermal shutdown that protects the device and load. A fault status output flag is asserted during over-current and thermal shutdown conditions.

The power-enable inputs and the fault status outputs are routed to the Raspberry Pi's GPIO lines to easily control and monitor connected USB devices from your application.

Power is on by default. GPIO30 and GPIO31 control power to USB1 and USB2 respectively. Set GPIO30/31 low to enable power to USB1/2, or high to remove power.

GPIO0 and GPIO1 return the fault state of USB1 and USB2. These lines will be high in normal conditions, or low when a fault is present.

Secure element

Strato Pi CM Duo embeds the ATECC608A or ATECC608B (depending on production lot) secure element chip from Microchip. The chip is connected to the Raspberry Pi Compute Module via I^2C bus (address 0x60).

Its key features are:

- Cryptographic co-processor with secure hardware-based key storage
- Protected storage for up to 16 Keys, certificates or data
- Hardware support for asymmetric sign, verify, key agreement – ECDSA: FIPS186-3 Elliptic Curve Digital Signature
  - ECDH: FIPS SP800-56A Elliptic Curve Diffie-Hellman
  - NIST standard P256 elliptic curve support
- Hardware support for symmetric algorithms
  - SHA-256 & HMAC hash including off-chip context save/restore
  - AES-128: encrypt/decrypt, Galois field multiply for GCM
- Networking key management support
  - Turnkey PRF/HKDF calculation for TLS 1.2 & 1.3
  - Ephemeral key generation and key agreement in SRAM – Small message encryption with keys entirely protected
- Secure boot support
  - Full ECDSA code signature validation, optional stored digest/signature – optional communication key disablement prior to secure boot
  - Encryption/Authentication for messages to prevent on-board attacks
- Internal high-quality FIPS 800-90 A/B/C Random Number Generator (RNG)
- Two high-endurance monotonic counters
- Guaranteed unique 72-bit serial number.

Push button

There is a recessed push button that is easily accessible removing the front panel. When this button is pressed, the Strato Pi CM Duo controller will set GPIO38 high, so that an application can easily detect it by simply polling this GPIO line.

LED

Strato Pi CM Duo has an on-board LED that can be controlled using GPIO16. Simply set GPIO16 high to turn on the LED.

Hardware watchdog

Strato Pi CM Duo implements a dedicated hardware watchdog circuit that can be used to perform the hardware reset of the Raspberry Pi Compute Module.

Being controlled by Raspberry Pi's GPIO pins, it is extremely easy to control watchdog operation using simple custom scripts in your application.

The watchdog can also swap the boot SD card after one or more consecutive watchdog timeouts, to automatically recover from SD cards failures.

Watchdog default behavior is described below, but all timing parameters and control logic can be modified as described in the "Strato Pi Logic Controller Advanced Configuration Guide" document.

The watchdog is normally disabled. To enable it, set GPIO39 pin to high. While GPIO39 is high, the Strato Pi CM Duo controller will watch for state changes of the GPIO32 heartbeat pin. You should ensure that GPIO32 flips its state between high and low faster than every 60 seconds.

If the Strato Pi CM Duo controller doesn't see GPIO32 changing state for more than 60 seconds, it will initiate a shutdown procedure, rising the GPIO17 timeout pin to high, to signal that a watchdog timeout has occurred.

If possible, you should immediately initiate a software shutdown on Raspberry Pi Compute Module, and set the GPIO18 shutdown pin to high. When GPIO18 is set to high or 60 seconds after the timeout, Strato Pi CM Duo will wait 60 seconds more, then reset the Raspberry Pi Compute Module (pulling the RUN line low).

Note that Strato Pi CM Duo will reset the Raspberry Pi Compute Module even if GPIO18 is not set high. In this case the power cycles occurs 120 seconds after the heartbeat timeout.

Reset cycle

You can start a delayed reset cycle by rising Raspberry Pi's GPIO18 pin.

When GPIO18 is set to high, Strato Pi CM Duo will wait 60 seconds and then reset the Raspberry Pi Compute Module.

Advanced configuration

The Strato Pi CM Duo logic controller can be configured from the Raspberry Pi to change the default behavior and timing of the hardware watchdog and reset features. The RX/TX switching mode (TX-Enable control) of the RS-485 serial port is also configurable.

These configuration parameters can be accessed using the Strato Pi kernel module or implementing the underlying ASCII-based serial protocol described in the "Strato Pi Logic Controller Advanced Configuration Guide" document.

Block diagram

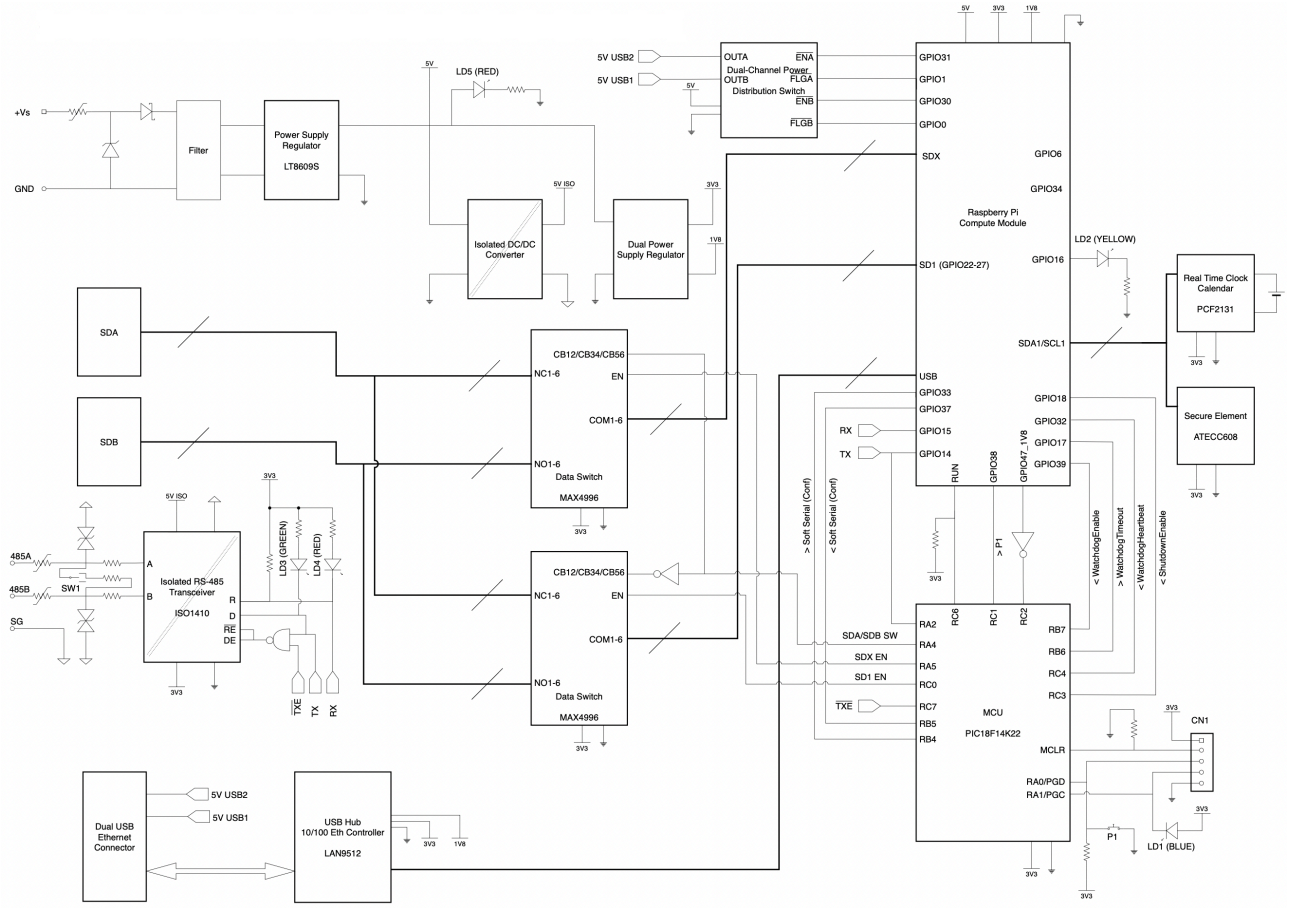

STRATO PI CM DUO BLOCK DIAGRAM

Technical specifications

POWER SUPPLY	
Power supply operating voltage (VS)	⎓dc 24 V nominal (range 9-28 V) 1.1 A Reverse polarity protection with 1.1 A resettable fuse
Current consumption at VS 12 V⎓ including Raspberry Pi CM 3+ Lite, with Ethernet and RS-485 connected, no USB devices	low CPU load: 170 mA 100% CPU load: 410 mA Actual current consumption may vary based on working conditions
Current consumption at VS 24 V⎓ including Raspberry Pi CM 3+ Lite, with Ethernet and RS-485 connected, no USB devices	low CPU load: 100 mA 100% CPU load: 220 mA Actual current consumption may vary based on working conditions
USB1 port output current	500 mA (max)
USB2 port output current	500 mA (max)
RASPBERRY PI COMPATIBILITY	
Raspberry platform compatibility	Raspberry Pi Compute Module 1 (not UL evaluated) Raspberry Pi Compute Module 3 (not UL evaluated) Raspberry Pi Compute Module 3+ Raspberry Pi Compute Module 4S
RS-485 INTERFACE	
Interface	Half-Duplex with automatic data direction management
Baud rates	1200 to 115200
ESD-Protection Voltage on A, B	±15 kV human body model ±8 kV contact discharge
Surge protection on A, B	Surge protection up to ±500 V / 2 Ohms 1.2/50 µs; 600 W peak pulse power capability at 10/1000 µs waveform
Fail safe feature	Guarantees a logic high receiver output when the receiver inputs are shorted, open, or connected to a terminated transmission line with all drivers disabled
REAL TIME CLOCK	
Oscillator frequency	32768 kHz
Frequency Tolerance	±3 ppm

Backup battery	Only use CR1220 Lithium/Manganese Dioxide or BR1220 Lithium Poly-Carbon Monofluoride batteries. UL evaluated models: • Renata SA CR1220 MFR • Renata SA CR1220 • EEMB CO LTD CR1220 EEMB Expected battery life without main power supply: 3 or more years, depending on environmental conditions
ENVIRONMENTAL	
Operating temperature	-20…+50 °C CM3+, CM4S extended range: -20…+60 °C (not UL evaluated)
Storage temperature	-30…+80 °C
Humidity	5% to 95% RH noncondensing
Altitude	Up to 2000 m
Protection degree	IP20 (not UL evaluated)
Vibration IEC 60068-2-6 (Test Fc, Operating)	0.7 g @ 5…100 Hz
EMI IMMUNITY STANDARDS	
Electromagnetic immunity compliance	EN 61000-4-2 (ESD) EN 61000-4-3 (Radiated RF Field) EN 61000-4-4 (Burst/fast transient) EN 61000-4-5 (Surge) EN 61000-4-6 (Conducted) EN 61000-4-8 (Power frequency magnetic field)
UL CERTIFICATION	
UL File E526642	The device is intended to be supplied with limited energy source according to UL 61010-1 3rd Ed, section 9.4 or LPS in conformance with UL 60950-1 or Class 2 in compliance with UL 1310 or UL 1585. All auxiliary input/output ports have been considered as SELV accessible part due to the connection to the only one source of supply described above.
MECHANICAL	
Terminal block	Maximum conductor cross section: 1.5 mm^2 (16 AWG), or 0.5 mm^2 when using ferrules Recommended stripping length: 5 mm Screw thread: M2 Maximum screws tightening torque: 0.25 Nm
Dimensions	2 module DIN-rail enclosure width: 36.3 mm height: 90.5 mm depth: 62.0 mm
Weight	160 g (including Raspberry Pi Compute Module)

Dimensions

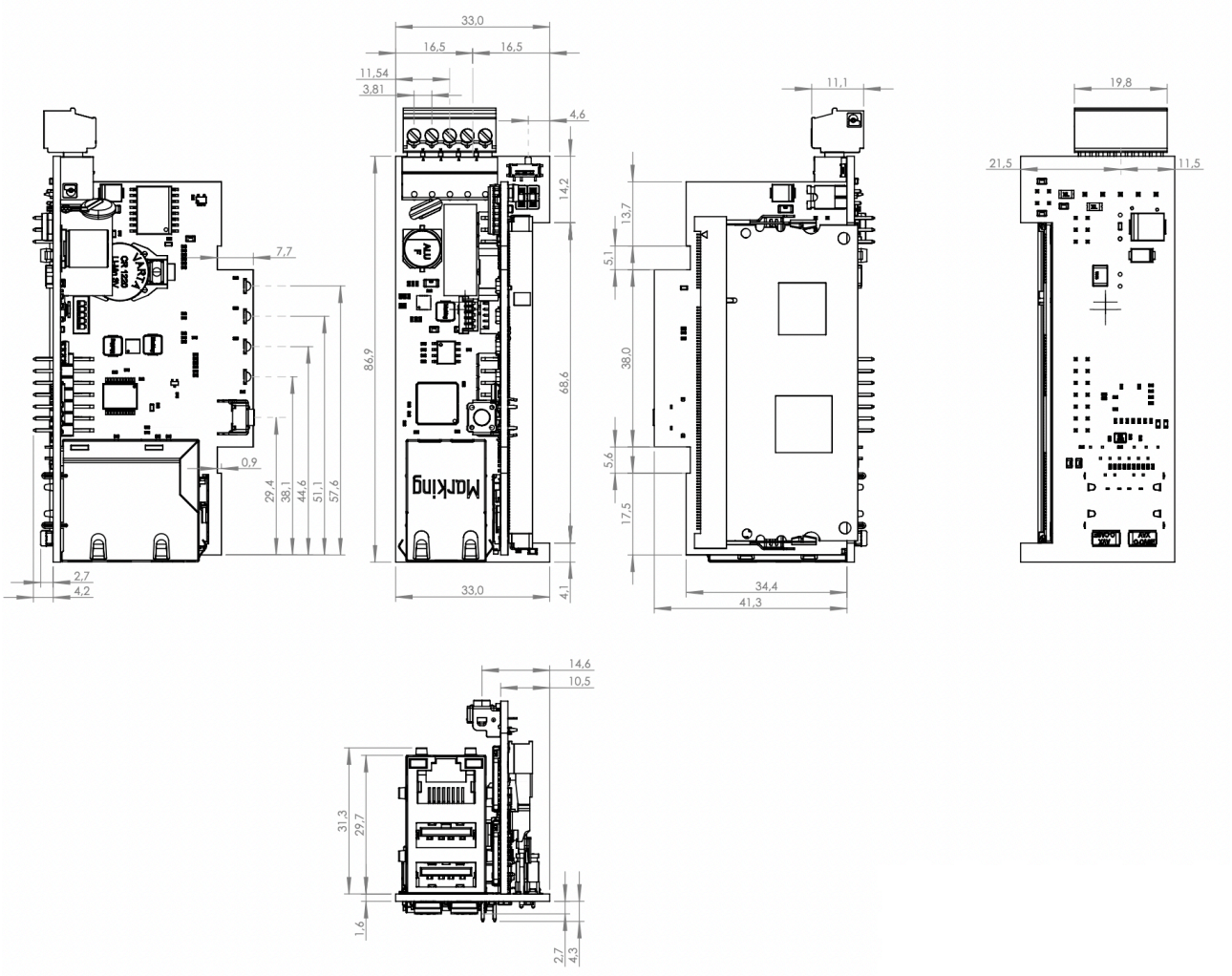

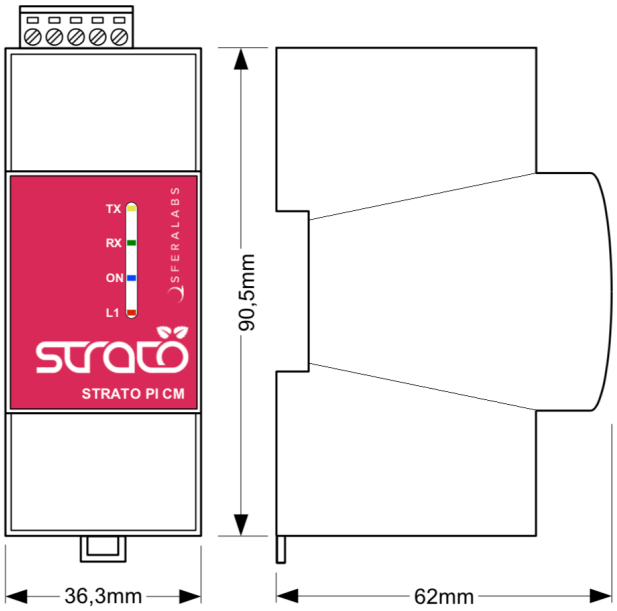

DIMENSIONS (mm)

Disposal

Waste Electrical & Electronic Equipment

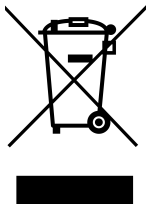

(Applicable in the European Union and other European countries with separate collection systems). This marking on the product, accessories or literature indicates that the product should not be disposed of with other household waste at the end of their working life. To prevent possible harm to the environment or human health from uncontrolled waste disposal, separate these items from other types of waste and recycle them responsibly to promote the sustainable reuse of material resources. Household users should contact either the retailer where they purchased this product, or their local government office, for details of where and how they can take these items for environmentally safe recycling. This product and its electronic accessories should not be mixed with other commercial wastes for disposal.

Strato Pi CM Duo contains a small non rechargeable manganese dioxide lithium coin battery.

In the Strato Pi CM Duo, the battery is not accessible from the outside. You should first remove the case body to gain access to the Strato Pi CM Duo circuit board. Always remove the battery before disposing of this product.

Installation and use restrictions

Standards and regulations

The design and the setting up of electrical systems must be performed according to the relevant standards, guidelines, specifications and regulations of the relevant country. The installation, configuration and programming of the devices must be carried out by trained personnel.

The installation and wiring of connected devices must be performed according to the recommendations of the manufacturers (reported on the specific data sheet of the product) and according to the applicable standards.

All the relevant safety regulations, e.g. accident prevention regulations, law on technical work equipment, must also be observed.

Safety instructions

Carefully read the safety information section at the beginning of this document.

Set-up

For the first installation of the device proceed according to the following procedure:

- make sure all power supplies are disconnected
- install and wire the device according to the schematic diagrams on the specific product user guide

- after completing the previous steps, switch on the power supply and other related circuits.

Conformity Information

EU

This device complies with the following applicable European Community harmonised standards:

- 2014/30/EU - Electromagnetic Compatibility Directive (EMC)
- 2011/65/EU and 2015/863/EU - Restriction of the use of certain hazardous substances in electrical and electronic equipment (RoHS)

The following harmonised standards have been used to demonstrate conformity to these directives:

- EN IEC 61000-6-2:2019 - EMC Immunity standard for industrial environments
- EN 61000-6-3:2007 / A1:2011 / AC:2012 - EMC Emission standard for residential, commercial and light-industrial environments

The declaration of conformity is available at: https://www.sferalabs.cc

USA

This equipment has been tested and found to comply with the limits for a Class B digital device, pursuant to part 15 of the FCC Rules. These limits are designed to provide reasonable protection against harmful interference in a residential installation. This equipment generates, uses and can radiate radio frequency energy and, if not installed and used in accordance with the instructions, may cause harmful interference to radio communications. However, there is no guarantee that interference will not occur in a particular installation. If this equipment does cause harmful interference to radio or television reception, which can be determined by turning the equipment off and on, the user is encouraged to try to correct the interference by one or more of the following measures:

- Reorient or relocate the receiving antenna
- Increase the separation between the equipment and receiver
- Connect the equipment into an outlet on a circuit different from that to which the receiver is connected
- Consult the dealer or an experienced radio/TV technician for help.

Shielded cables must be used with this equipment to maintain compliance with FCC regulations.

This device complies with Part 15 of the FCC Rules. Operation is subject to the following two conditions: (1) this device may not cause harmful interference, and (2) this device must accept any interference received, including interference that may cause undesired operation.

CANADA

This Class B digital apparatus complies with Canadian ICES-003.

Cet appareil numérique de la classe B est conforme à la norme NMB-003 du Canada.

RCM AUSTRALIA / NEW ZEALAND

This product meets the requirements of the standard EN 61000-6-3:2007/A1:2011/AC:2012 - Emission for residential, commercial and light-industrial environments.