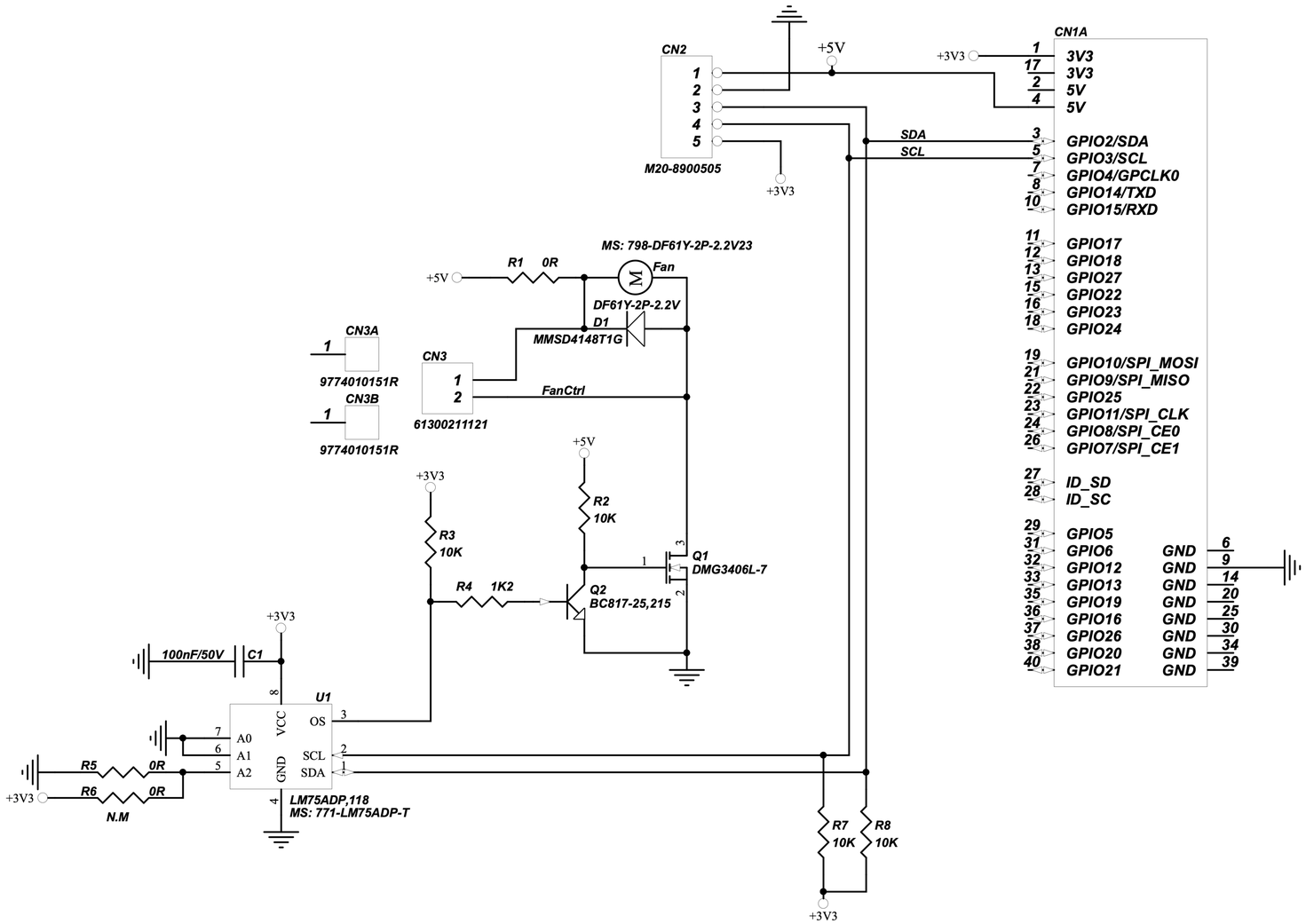


**Product schematics**
SPBF10X - Strato Pi Fan

SFERALABS

© 2021 Sfera Labs S.r.l.