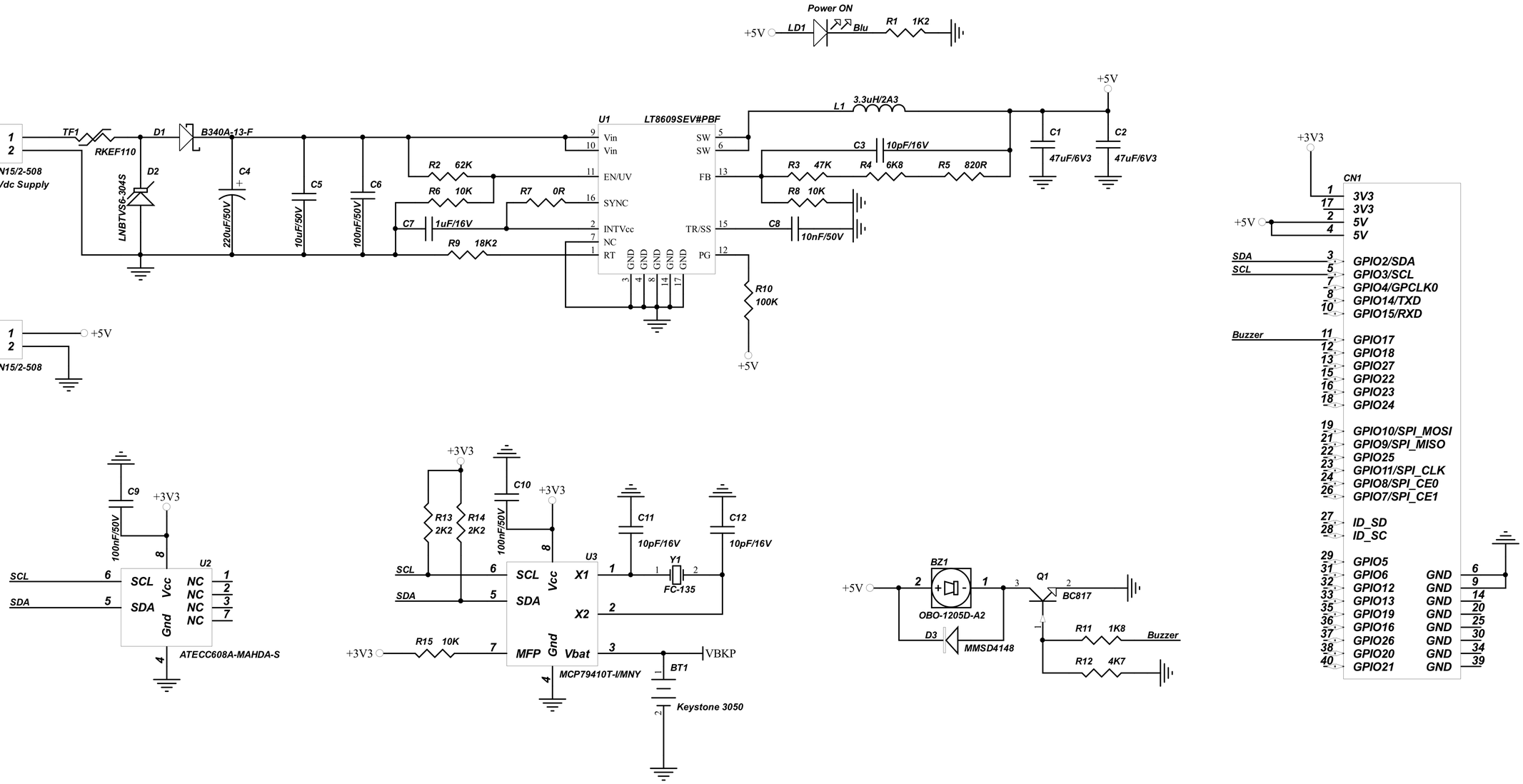

Product schematics

SPBM20X - Strato Pi Mini board

SFERALABS

© 2015-2018 Sfera Labs S.r.l.