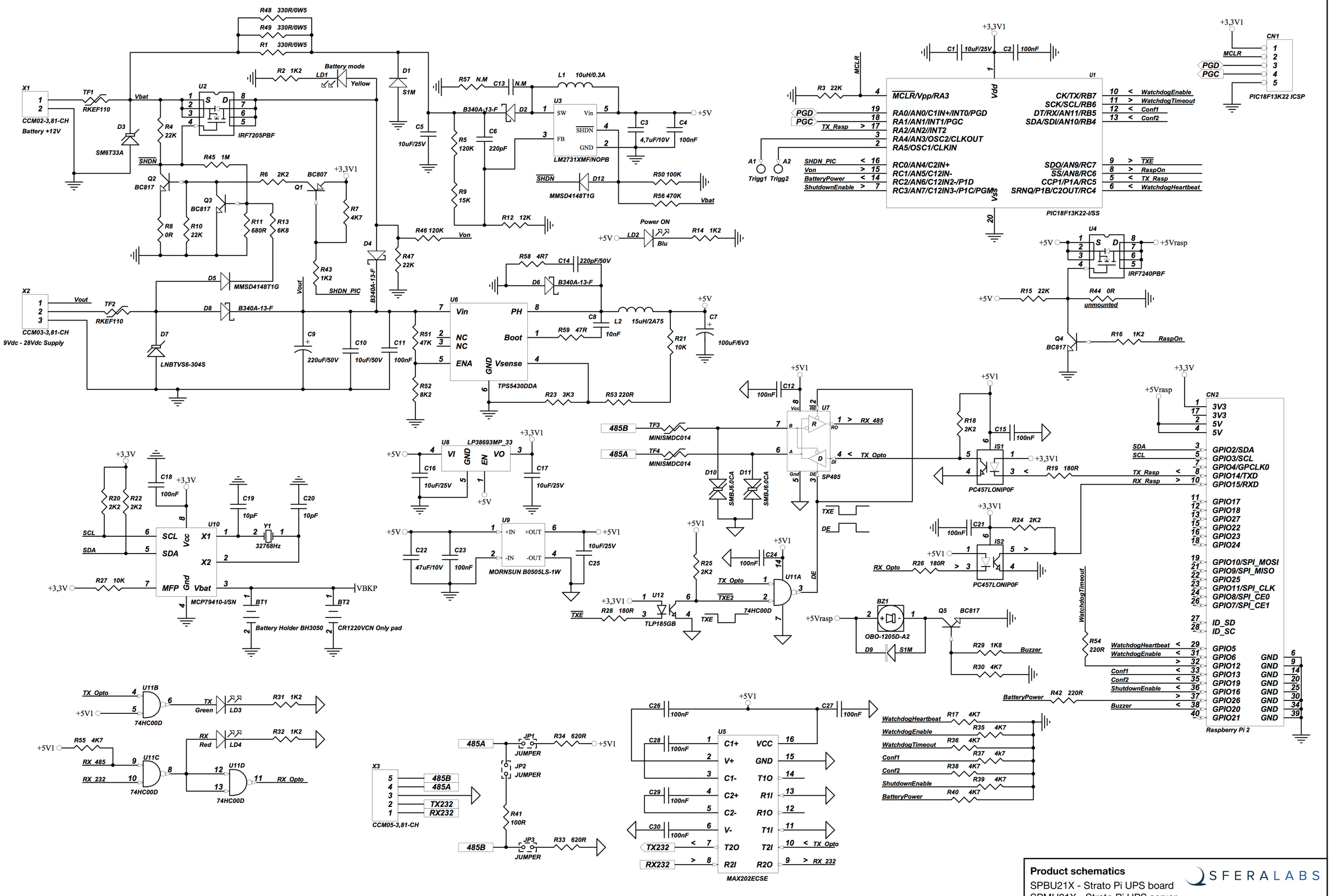

Product schematics

SPBU21X - Strato Pi UPS board

SPMU21X - Strato Pi UPS server

SFERALABS

© 2015-2017 Sfera Labs S.r.l.