Strato Pi UPS User Guide

August 2019

Revision 015

SPBU21X *Strato Pi UPS board*

SPMU21X *Strato Pi UPS server with Raspberry Pi 3 Model B*

SPMU21XP *Strato Pi UPS server with Raspberry Pi 3 Model B+*

SFERALABS

Safety information 4
- Qualified personnel 4
- Hazard levels 4
- Safety instructions 5
  - General safety instructions 5
  - Battery and external rechargeable battery 5

Introduction 7

Features 8

Usage and connections 9
- Hardware Installation 9
  - Strato Pi UPS board 9
  - Strato Pi UPS server 10
- The external UPS battery 10
- Replacing the RTC backup battery 10
- Terminal block 12
- Power supply 13
- Auxiliary power supply output 14
- Dedicated GPIO pins 14

Software installation and configuration 15
- Installing the Strato Pi utility on Raspbian 15
- Installing the Real Time Clock software 15
- Testing the Real Time Clock 16
- Disabling Bluetooth, WiFi and the serial console 17

Using Strato Pi UPS 18
- Real Time Clock 18
- Serial port 18
- Buzzer 19
- UPS 20
- Hardware watchdog 20
- Power cycle 21

Block diagram 22

Technical specifications 23

Dimensions 25

Disposal 26

Installation and use restrictions 26
- Standards and regulations 26

Safety instructions 26
Set-up 26
Conformity Information 27
EU 27
USA 27
CANADA 27
AUSTRALIA / NEW ZEALAND 28
Compliance information for Raspberry Pi 3 Model B 28
EU 28
USA 28
CANADA 28
Compliance information for Raspberry Pi 3 Model B+ 28
EU 29
USA 29
CANADA 29

Be sure to always remove the power supply before connecting or disconnecting the Strato Pi UPS board to Raspberry Pi.

Follow all applicable electrical safety standards, guidelines, specifications and regulations for installation, wiring and operations of Strato Pi UPS.

Carefully and fully read this Strato Pi UPS user guide before installation.

Strato Pi UPS is not authorised for use in safety-critical applications where a failure of the product would reasonably be expected to cause personal injury or death. Safety-critical applications include, without limitation, life support devices and systems, equipment or systems for the operation of nuclear facilities and weapons systems. Strato is neither designed nor intended for use in critical military or aerospace applications or environments and for automotive applications or environment. Customer acknowledges and agrees that any such use of Strato Pi UPS is solely at Customer's risk, and that Customer is solely responsible for compliance with all legal and regulatory requirements in connection with such use.

Sfera Labs S.r.l. may make changes to specifications and product descriptions at any time, without notice. The product information on the web site or materials is subject to change without notice.

Please download and read the Sfera Labs Terms and Conditions document available at:

http://www.sferalabs.cc

Strato and Sfera Labs are trademarks of Sfera Labs S.r.l. Other brands and names may be claimed as the property of others.

Copyright © 2015-2019 Sfera Labs S.r.l. All rights reserved.

Safety information

Carefully and fully read this user guide before installation and retain it for future reference.

Qualified personnel

The product described in this manual must be operated only by personnel qualified for the specific task and installation environment, in accordance with all relevant documentation and safety instructions. A qualified person should be capable of fully identifying all installation and operation risks and avoid potential hazards when working with this product.

Hazard levels

This manual contains information you must observe to ensure your personal safety and prevent damage to property. Safety information in this manual are highlighted by the safety symbols below, graded according to the degree of danger.

DANGER

Indicates a hazardous situation which, if not avoided, **will** result in death or serious personal injury.

WARNING

Indicates a hazardous situation which, if not avoided, **may** result in death or serious personal injury.

CAUTION

Indicates a hazardous situation which, if not avoided, can result in minor or moderate personal injury.

NOTICE

Indicates a situation which, if not avoided, can result in damage of property.

Safety instructions

General safety instructions

Protect the unit against moisture, dirt and any kind of damage during transport, storage and operation. Do not operate the unit outside the specified technical data.

Never open the housing. If not otherwise specified, install in closed housing (e.g. distribution cabinet). Earth the unit at the terminals provided, if existing, for this purpose. Do not obstruct cooling of the unit. Keep out of the reach of children.

WARNING

Life threatening voltages are present within and around an open control cabinet.

When installing this product in a control cabinet or any other areas where dangerous voltages are present, always switch off the power supply to the cabinet or equipment.

WARNING

Risk of fire if not installed and operated properly.

Follow all applicable electrical safety standards, guidelines, specifications and regulations for installation, wiring and operations of this product.

The Raspberry Pi board could generate a substantial amount of heat when the software forces the CPU and/or GPU to operate at high load levels. Ensure that the product is properly installed and ventilated to prevent overheat.

NOTICE

The connection of expansion devices to this product may damage the product and other connected systems, and may violate safety rules and regulations regarding radio interference and electromagnetic compatibility.

Use only appropriate tools when installing this product. Using excessive force with tools may damage the product, alter its characteristics or degrade its safety.

Battery and external rechargeable battery

This product uses a small lithium non-rechargeable battery to power its internal real time clock (RTC). It also optionally uses an external rechargeable lead-acid battery for the uninterruptible power supply.

WARNING

Improper handling of lithium and lead-acid batteries can result in an explosion of the batteries and/or release of harmful substances.

Worn-out or defective batteries can compromise the function of this product.

Replace the RTC lithium battery before it is completely discharged. The lithium battery must be replaced only with an identical battery. See the "Replacing the RTC backup battery" section for instructions.

Do not throw lithium batteries into fire, do not solder on the cell body, do not recharge, do not open, do not short-circuit, do not reverse polarity, do not heat above 100°C and protect from direct sunlight, moisture and condensation.

Only use a lead-acid battery with electrical ratings recommended in the technical specifications for this product.

Follow the battery manufacturer's instructions when installing the external UPS battery (not provided).

Dispose of used batteries according to local regulations and the battery manufacturer's instructions.

Introduction

Strato Pi UPS enhances the Raspberry Pi Model B version 2 and 3 computers with several hardware features to make it suitable for use in professional applications where reliability and service continuity are key requirements.

Strato Pi UPS is available as a bare board or fully assembled unit including a Raspberry Pi 3 Model B or B+ in a standard DIN-rail case.

The information contained in this manual covers all versions, except where explicitly stated otherwise. The bare board is called “Strato Pi UPS board”, while the assembled unit is “Strato Pi UPS server”.

Features

Strato Pi UPS board and server:

- ✓ 9-28Vdc power supply, with surge and reverse polarity protection, and 1.1A resettable fuse
- ✓ up to 3.1A max current to the 5V Raspberry Pi power supply input pins (at 24Vdc)
- ✓ real time clock with replaceable CR1025 Lithium / Manganese Dioxide back-up battery
- ✓ standard RS-232 and RS-485 interfaces to the Raspberry Pi serial line, with opto-isolator and electrostatic discharge protection.
- ✓ on-board buzzer, connected to a GPIO pin of the Raspberry Pi board, for acoustic feedback
- ✓ hardware watchdog implemented in the Strato Pi board, fully independent from the Raspberry Pi, controlled via the GPIO pins of the Raspberry Pi board
- ✓ on-board LEDs for power supply and serial line activity
- ✓ power supply and serial connections on a screw terminal block
- ✓ integrated uninterruptible power supply, with external lead-acid 12V battery
- ✓ 1.1A resettable fuse on battery input
- ✓ auxiliary power supply output voltage, to power external devices through Strato Pi UPS
- ✓ simple UPS status and control via the GPIO pins of the Raspberry Pi board
- ✓ on-board LED for battery operations status

Strato Pi UPS server only:

- ✓ pre-assembled and tested Raspberry Pi 3 Model B or B+ with Strato Pi board in a standard 4 modules DIN rail case
- ✓ side access to HDMI and 3.5mm jack for audio and composite video
- ✓ access to all USB ports and Ethernet port (opposite to the power and serial terminal block)

Usage and connections

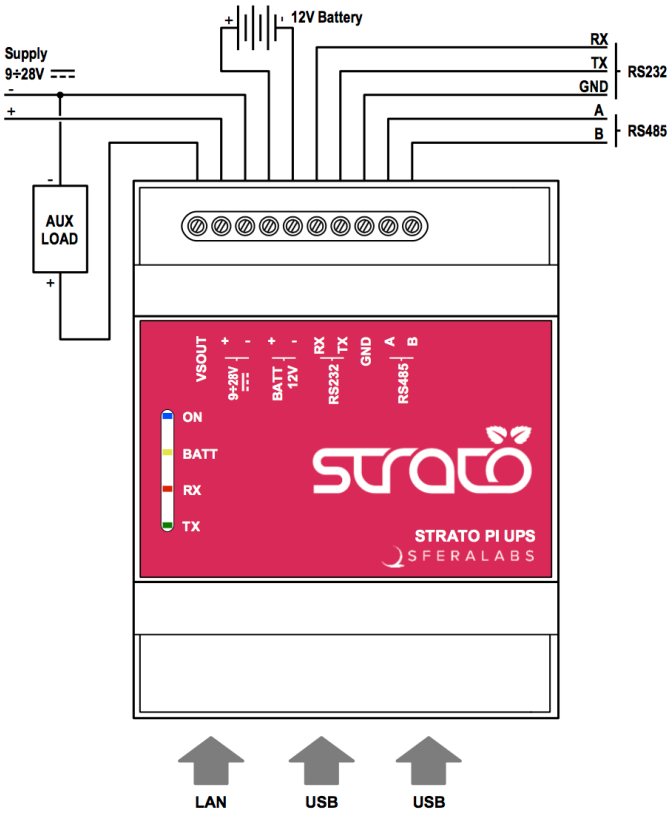

STRATO PI UPS CONNECTION DIAGRAM

Hardware Installation

Strato Pi UPS board

The Strato Pi UPS board is supplied with all connectors pre-installed. No soldering is required. You should connect Strato Pi to Raspberry Pi through the GPIO connector. Use appropriate turrets/spacers to firmly bolt the two boards together, ensuring that no conductive part of one board touches any part of the other board.

Be particularly careful to ensure there is enough clearance between the Ethernet and USB connectors and the bottom of Strato Pi's circuit board.

NOTICE

The GPIO connector of the Strato Pi UPS board must be perfectly aligned to the Raspberry Pi's GPIO pins. Turning on the Raspberry Pi and/or the Strato Pi UPS board with the GPIO not correctly connected will damage both the Raspberry Pi and Strato Pi UPS.

Strato Pi UPS server

The Strato Pi UPS server comes pre-assembled with a Raspberry Pi 3 Model B or B+ board, in a plastic standard DIN-rail case.

There is no need to open the case, unless a change in the RS-485 termination resistors is required (see below).

The Micro SD card (not provided) can be inserted through a small opening on the side of the case. Use a small pen or paper clip to gently push the card in its slot.

The external UPS battery

To take advantage of the UPS features of Strato Pi, you can connect an external lead acid rechargeable battery to the BATT terminals of the Strato Pi UPS terminal block. See the connection diagram above.

WARNING

Improper handling of lead acid batteries can result in an explosion of the batteries and/or release of harmful substances.

Worn-out or defective batteries can compromise the function of this product.

Replace the battery every 5 years even if the battery is still working properly.

Only use a lead acid battery with electrical ratings recommended in the technical specifications for this product (12V 1.2Ah max).

Reversing the battery polarity may damage the product and the battery.

Dispose of used batteries according to local regulations and the battery manufacturer's instructions.

Follow the battery manufacturer's instructions when installing the external UPS battery (not provided).

Replacing the RTC backup battery

Strato Pi UPS has a hardware real time clock with a dedicated long-life non-rechargeable back-up battery.

Strato Pi UPS is shipped with a **CR1025** Lithium / Manganese Dioxide (Li/MnO2) battery installed.

The battery is only used to power the RTC chip when the main or UPS battery power is not available (when the Raspberry Pi is off). Depending on operating conditions it should last up to two years if the Strato Pi board is not powered, more if the Strato Pi UPS receives external power.

WARNING

Improper handling of lithium batteries can result in an explosion of the batteries and/or release of harmful substances.

Worn-out or defective batteries can compromise the function of this product.

KEEP OUT OF REACH OF CHILDREN. Swallowing may lead to serious injury or death in as little as 2 hours due to chemical burns and potential perforation of the esophagus. Immediately see doctor.

Replace the RTC lithium battery before it is completely discharged. Replace the battery every 5 years even if the battery is still working properly. The lithium battery must be replaced only with an identical **CR1025** Lithium / Manganese Dioxide (Li/MnO2) battery.

Do not throw lithium batteries into fire, do not solder on the cell body, do not recharge, do not open, do not short-circuit, do not reverse polarity, do not heat above 100°C and protect from direct sunlight, moisture and condensation.

Dispose of used batteries according to local regulations and the battery manufacturer's instructions.

The RTC backup battery holder is soldered to the bottom layer of the circuit board, between the GPIO connectors. In the Strato Pi UPS server, the battery is not accessible from the outside. You should first remove the case top body to gain access to the Strato Pi UPS circuit board.

NOTICE

Before opening the Strato Pi UPS case, disconnect all power sources, any connection to external devices, including USB cables, and disconnect the UPS external battery.

Use a non-conductive pin or small tool to help extract the battery from its holder. Insert the new battery with a gentle push. You don't need tools to insert the battery. The battery is held into place by a spring contact.

Be sure to insert the battery so that the positive (+) terminal of the battery is in contact with the outer body of the battery holder, and the negative (-) terminal is in contact with the contact pad of the circuit board, as shown in the photo below.

Reversing the battery polarity may damage the product.

The real time clock will reset its time immediately when the RTC backup battery is disconnected.

Follow these steps, in the exact order, to open the case and replace the battery:

1. Remove the microSD card (the card will be damaged if you open the case with the card still inserted)
2. Remove the black plastic DIN rail hook
3. With a small flat screwdriver gently separate the bottom case and boards assembly from the top cover

4. Use a non-conductive pin or small tool to help extract the battery from its holder
5. Insert the new battery with a gentle push. Respect the battery polarity
6. Replace the case bottom applying a gentle pressure on the corners
7. Replace the black plastic DIN rail hook
8. Insert the microSD card.

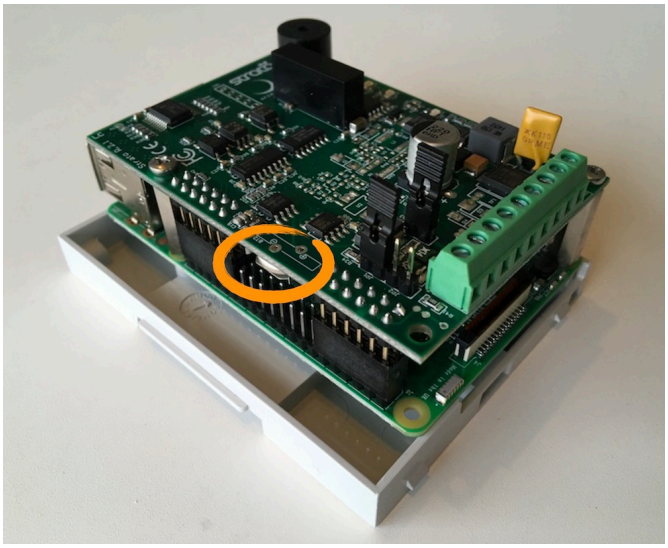

RTC BACKUP BATTERY

Terminal block

Strato Pi UPS has a 10 positions terminal block for power, battery, auxiliary power supply output and serial connections.

The maximum conductor cross section is 1.5 mm² (16 AWG), or 0.5 mm² when using ferrules (highly recommended). Recommended stripping length is 5 mm. Screw thread is M2. Never exceed 0.25 Nm torque when tightening the screws.

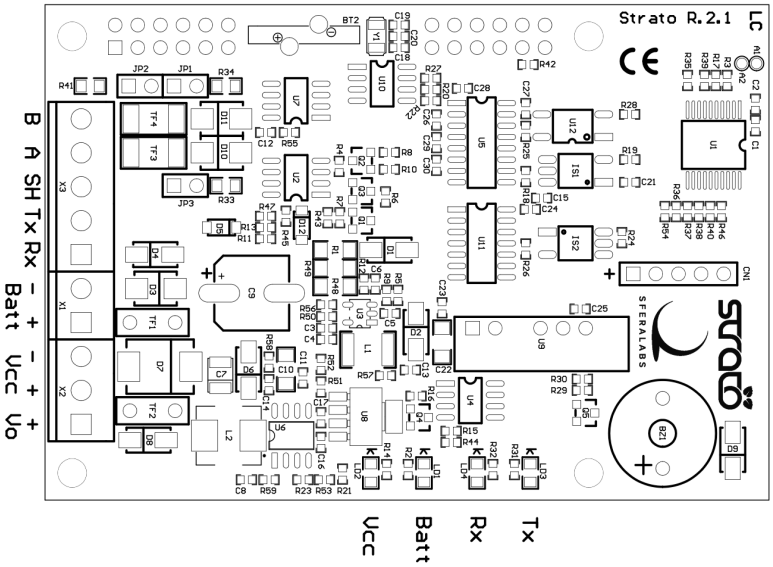

THE STRATO PI UPS CIRCUIT BOARD

Power supply

Strato Pi UPS can be powered with DC voltage only:

✓ DC: nominal voltage range 8.1V to 28.0V.

Respect the correct polarity shown in the schematic diagram (+ -). The power supply circuit implements reverse polarity protection using an auto resetting fuse and surge protection up to ±1000V/2ohms 1.2/50µs.

A blue on-board LED, also visible through the front panel of the DIN-rail case, is lit when power supply is available.

When a Strato Pi UPS board is used, never connect the Raspberry Pi micro-USB power plug.

The Strato Pi UPS power supply stage is optimised to deliver up to 3A at 5V to the Raspberry Pi. Because Strato Pi has a 1.1A resettable fuse (polyfuse) on the power supply line, the maximum current that its regulator can deliver is also limited by this fuse, and depends on the input voltage. The following table lists the typical measured output current of the power supply stage at different input voltages and the corresponding input current.

		9V	12V	24V
Iout	**Vout**	**Iin**	**Iin**	**Iin**
0.1	5.02	0.1	0.08	0.05
1.0	4.99	0.69	0.52	0.26
1.3	4.98	0.90	0.68	0.34
1.5	4.97	1.04	0.79	0.39
1.6	4.97	1.14 KO	0.85	0.41
1.8	4.97		0.92	0.46
1.9	4.96		1.01	0.48
2.0	4.96		1.06	0.51
2.2	4.95		1.16 KO	0.56
2.5	4.94			0.63
3.0	4.93			0.78
3.2	4.92			0.83

STRATO PI UPS POWER SUPPLY STAGE TYPICAL IN/OUT VOLTAGE AND CURRENT

A 1.1A resettable fuse is also used to protect the battery input. When Strato Pi UPS works under battery power, the maximum 5V current delivered to the Raspberry Pi should not exceed 2.0A when the battery is fully charged.

Auxiliary power supply output

Strato Pi UPS has an auxiliary power supply output pin, labeled VSOUT, to power external devices.

The aux power supply output is connected to the main power supply input, and switched to the battery input when there is no power on the main power supply input.

It is not a regulated voltage output and should only be used to power devices that accept a wide range power supply, compatible to both the battery voltage and the power supply voltage you are using.

When the Raspberry Pi is turned off by the Strato Pi UPS controller, the aux power supply output is also switched off.

The maximum current drawn by the loads connected to VSOUT is limited by the current drawn by the Raspberry Pi, the power supply or battery input voltage, and the 1.1A resettable fuses that limit the total amount of input current.

Dedicated GPIO pins

Strato Pi uses some of the Raspberry Pi's GPIO pins. These pins should not be used for other functions.

GPIO pin	Direction	Description
GPIO2/SDA		I^2C SDA line for the real time clock
GPIO3/SCL		I^2C SCL line for the real time clock
GPIO14/TXD	out	serial TX line
GPIO15/RXD	in	serial RX line
GPIO5	out	cycle high/low for watchdog heartbeat
GPIO6	out	set to high to enable the watchdog
GPIO12	in	high on watchdog timeout
GPIO16	out	set to high to enable the shutdown cycle
GPIO20	out	set to high to sound the buzzer
GPIO26	in	high when on battery power

Software installation and configuration

All features of Strato Pi UPS, except the real time clock, are controlled via dedicated GPIO pins and can be used with any operating system and programming language that supports the GPIO pins control on Raspberry Pi. The real time clock is interfaced via the I²C serial bus.

The following software installation notes are based on the Raspbian Jessie operating system.

Installing the Strato Pi utility on Raspbian

The Strato Pi utility is a simple command-line script to control Strato Pi's buzzer, watchdog and UPS functions.

Run the following commands to download and install the Strato Pi utility:

```
$ cd /usr/local/bin
$ sudo wget http://sferalabs.cc/files/strato/strato
$ sudo chmod 755 strato
```

You can run the Strato Pi utility without arguments to print its options:

```
$ strato
Usage: strato beep on|off|length_millis|length_millis pause_millis repeats
       strato watchdog enable|disable|heartbeat|timeout
       strato shutdown
       strato battery
```

All commands should be run as superuser, so always use sudo to run strato.

Installing the Real Time Clock software

The RTC is based on the Microchip MCP79410 module and is connected to the Raspberry Pi via its I²C serial bus.

Before downloading the installation utility, you should enable I²C and install the "i2c-tools" package.

To enable I²C, run the "raspi-config" configuration utility:

```
$ sudo raspi-config
```

Then go to "Advanced Options", "I2C" and select "yes" to enable the I²C interface, then reboot your Raspberry Pi.

To install the "i2c-tools" package:

```
$ sudo apt-get update
$ sudo apt-get install i2c-tools
```

With these prerequisite installs completed, you should download and run Strato Pi's installation script:

```
$ cd
$ wget http://sferalabs.cc/files/strato/rtc-install
```

```
$ chmod 755 rtc-install
$ sudo ./rtc-install
```

If the script completes with no errors, delete the installation script and reboot:

```
$ rm rtc-install
$ sudo reboot
```

Testing the Real Time Clock

Assuming you are connected to the Internet and your Pi was able to reach a public NTP (Network Time Protocol) server, you should see the current date and time using the “date” command:

```
$ date
Thu Dec 10 18:02:32 CET 2015
```

Also check the date and time stored in the hardware clock:

```
$ sudo hwclock -r
Thu 10 Dec 2015 06:03:01 PM CET  -0.546570 seconds
```

If the returned date and time is not correct, or “hwclock” returns an error, use the “-w” option to set the hardware clock to the current time:

```
 $ sudo hwclock -w
```

Then recheck the time stored in the hardware clock to ensure it matches. Linux may have failed to automatically update the hardware clock after the last reboot if its internal registers contained invalid values.

If the RTC still doesn’t work, you should check if the Pi sees the RTC chip on the I²C bus. Run these two commands:

```
$ sudo modprobe -r rtc_ds1307
$ sudo i2cdetect 1
WARNING! This program can confuse your I2C bus, cause data loss and worse!
I will probe file /dev/i2c-1.
I will probe address range 0x03-0x77.
Continue? [Y/n]
     0  1  2  3  4  5  6  7  8  9  a  b  c  d  e  f
00:          -- -- -- -- -- -- -- -- -- -- -- -- --
10: -- -- -- -- -- -- -- -- -- -- -- -- -- -- -- --
20: -- -- -- -- -- -- -- -- -- -- -- -- -- -- -- --
30: -- -- -- -- -- -- -- -- -- -- -- -- -- -- -- --
40: -- -- -- -- -- -- -- -- -- -- -- -- -- -- -- --
50: -- -- -- -- -- -- -- 57 -- -- -- -- -- -- -- --
60: -- -- -- -- -- -- -- -- -- -- -- -- -- -- -- 6f
70: -- -- -- -- -- -- -- —
```

You should see “6f” in the address list. This is the address of the RTC.

If the RTC address is detected, double check your software installation for issues at the Linux modules level.

Run the “lsmod” command to list the loaded modules and check that “i2c_dev” and “i2c_bcm2708” are both listed.

If the RTC address is not detected, the cause could be a hardware problem, on the Strato board or the Raspberry Pi. If you have another Pi or Strato board, try swapping them to isolate the faulty board.

Disabling Bluetooth, WiFi and the serial console

On Raspberry Pi 3, the main UART is used for Bluetooth, and the TX/RX pins on the GPIO connector are controlled by a limited function Mini UART.

To route the main UART to the RX/TX pins that are connected to the Strato Pi serial ports you should disable Bluetooth. Edit /boot/config.txt and add these lines at the end of the file:

```
# Disable Bluetooth
dtoverlay=pi3-disable-bt
```

You may also run the following command to disable the Bluetooth HCI UART driver:

```
sudo systemctl disable hciuart
```

If you need to disable the WiFi, one convenient solution on Raspbian distributions is to blacklist the WiFi driver. Edit /etc/modprobe.d/raspi-blacklist.conf and add these lines at the end of the file:

```
# Disable WiFi
blacklist brcmfmac
blacklist brcmutil
```

Note that Bluetooth must be disabled to ensure proper operation of Strato Pi's serial ports.

If you are using Strato Pi's serial ports for your applications, you also need to disable the Linux serial console, otherwise it will send console data to the serial port.

Disable the ttyAMA0 console service:

```
sudo systemctl disable serial-getty@ttyAMA0.service
```

Edit the /boot/cmdline.txt file and delete the serial console configuration:

```
console=serial0,115200
```

Using Strato Pi UPS

Real Time Clock

Strato Pi UPS has a hardware real time clock with a dedicated long-life non-rechargeable back-up battery.

Once the RTC modules and configuration files are properly installed, you will simply use the date and time commands to control the hardware clock.

Serial port

Strato Pi UPS uses the Raspberry Pi standard UART TX/RX pins on the GPIO connector to implement a standard serial port with support for both RS-232 and RS-485.

Simply connect the RS-232 RX, TX and GND lines to the RS-232 posts of the Strato Pi terminal block or the RS-485 A, B and GND to the RS-485 posts of the terminal block.

Never connect both RS-232 and RS-485 lines to Strato Pi. Strato implements a single serial port, not two.

Both interfaces are isolated from the Raspberry Pi's serial lines using dedicated opto-couplers and from the main power supply with a high-efficiency DC-DC converter. This configuration should prevent ground loops between devices connected through the serial lines.

The RS-485 TX/RX switching is implemented automatically in the Strato Pi's micro-controller, based on speed and number of bits detection, and is completely transparent to the software controlling the UART on Raspberry Pi.

The RS-485 line has 620 Ohm pull-up and pull-down resistors on lines A and B. The biasing resistors ensure that, during idle periods the data lines are kept at a stable voltage level and prevent false triggering of receiver input.These resistors can be disabled by removing jumpers JP1 and JP3 respectively.

A 100 Ohm termination resistor between A and B can be enabled installing jumper JP2.

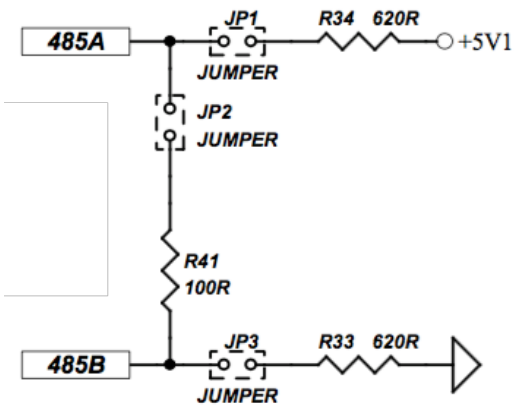

RS-485 JUMPERS SCHEMATIC

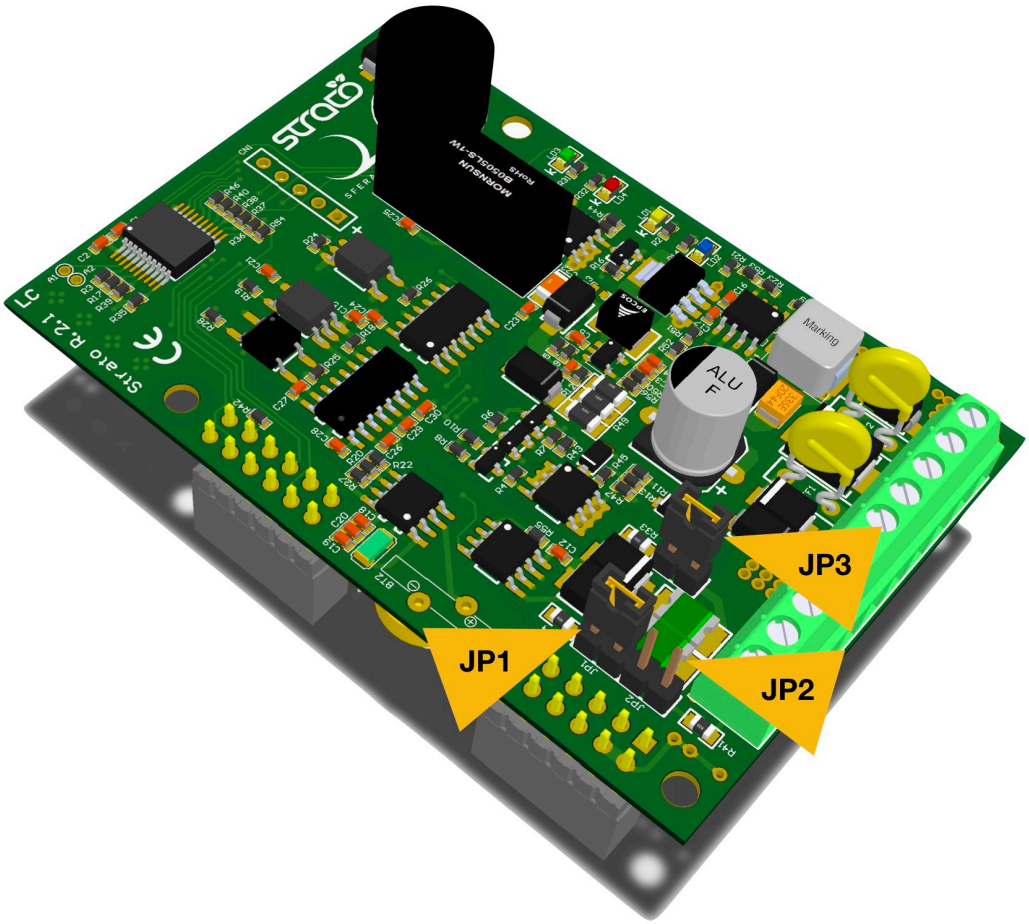

RS-485 JUMPERS POSITION

Buzzer

Strato Pi UPS has an on-board buzzer that can be controlled using GPIO20. Simply set GPIO20 to high to emit a continuous sound, and back to low to stop. The buzzer is not intended to emit sound indefinitely and could be damaged doing so.

The Strato Pi utility has several commands to control the buzzer.

Buzzer on continuously:

```
$ sudo strato beep on
```

Buzzer off:

```
$ sudo strato beep off
```

Buzzer on for 500 milliseconds:

```
$ sudo strato beep 500
```

Buzzer on for 500 milliseconds, followed by 100 milliseconds pause, repeated three times:

```
$ sudo strato beep 500 100 3
```

UPS

When an external lead-acid rechargeable battery is connected to the Strato Pi UPS board, the Raspberry Pi will remain powered by the Strato Pi board when the main power supply fails, as long as there is enough energy in the battery.

When power is available, the external rechargeable battery is slowly charged with a 30mA current.

Battery operations status is visually notified with an on-board LED and can be checked reading Raspberry Pi's GPIO26 pin.

You can start a delayed power off cycle by rising Raspberry Pi's GPIO16 pin.

When GPIO16 is set to high, Strato Pi will wait 60 seconds and then power off the Pi board for at least 5 seconds.

After being powered off, the Strato Pi UPS board will supply power to the Raspberry Pi only when the main power source is restored.

Starting from a power off condition, the Raspberry Pi will not receive power if only the back-up battery is connected to the Strato Pi board.

The Strato Pi utility implements the following commands to monitor and control the UPS.

To print "1" if Strato Pi is operating from the battery, or "0" if main power is present:

```
$ sudo strato battery; echo $?
```

Hardware watchdog

Strato Pi UPS implements a dedicated hardware watchdog circuit that can be used to perform a full power cycle of the Raspberry Pi.

Being controlled by Raspberry Pi's GPIO pins, it is extremely easy to control watchdog operation using simple custom scripts in your application.

The watchdog is normally disabled. To enable it, set GPIO6 pin to high. While GPIO6 is high, the Strato Pi controller will watch for state changes of the GPIO5 heartbeat pin. You should ensure that GPIO5 flips its state between high and low faster than every 60 seconds.

If the Strato Pi UPS controller doesn't see GPIO5 changing state for more than 60 seconds, it will initiate a shutdown procedure, rising the GPIO12 timeout pin to high, to signal that a watchdog timeout has occurred.

If possible, you should immediately initiate a software shutdown on Raspberry Pi, and set the GPIO16 shutdown pin to high. When GPIO16 is set to high or 60 seconds after the timeout, Strato Pi will wait 60 seconds more, then power cycle the Raspberry Pi.

Note that Strato Pi UPS will power cycle the Raspberry Pi even if GPIO16 is not set high. In this case the power cycles occurs 120 seconds after the heartbeat timeout.

The Strato Pi utility can be used to control the watchdog from your own application.

Enable the watchdog:

```
$ sudo strato watchdog enable
```

Disable the watchdog:

```
$ sudo strato watchdog disable
```

Send the heartbeat:

```
$ sudo strato watchdog heartbeat
```

Print “1” if the watchdog timeout is expired, “0” if not:

```
$ sudo strato watchdog timeout; echo $?
```

Power cycle

You can start a delayed power cycle by rising Raspberry Pi’s GPIO16 pin for at least one second.

When GPIO16 is set to high, Strato Pi UPS will wait 60 seconds and then power off the Pi board for 5 seconds.

The power cycle also affects the VSOUT auxiliary power supply output.

To initiate a delayed power off cycle:

```
$ sudo strato shutdown
```

Block diagram

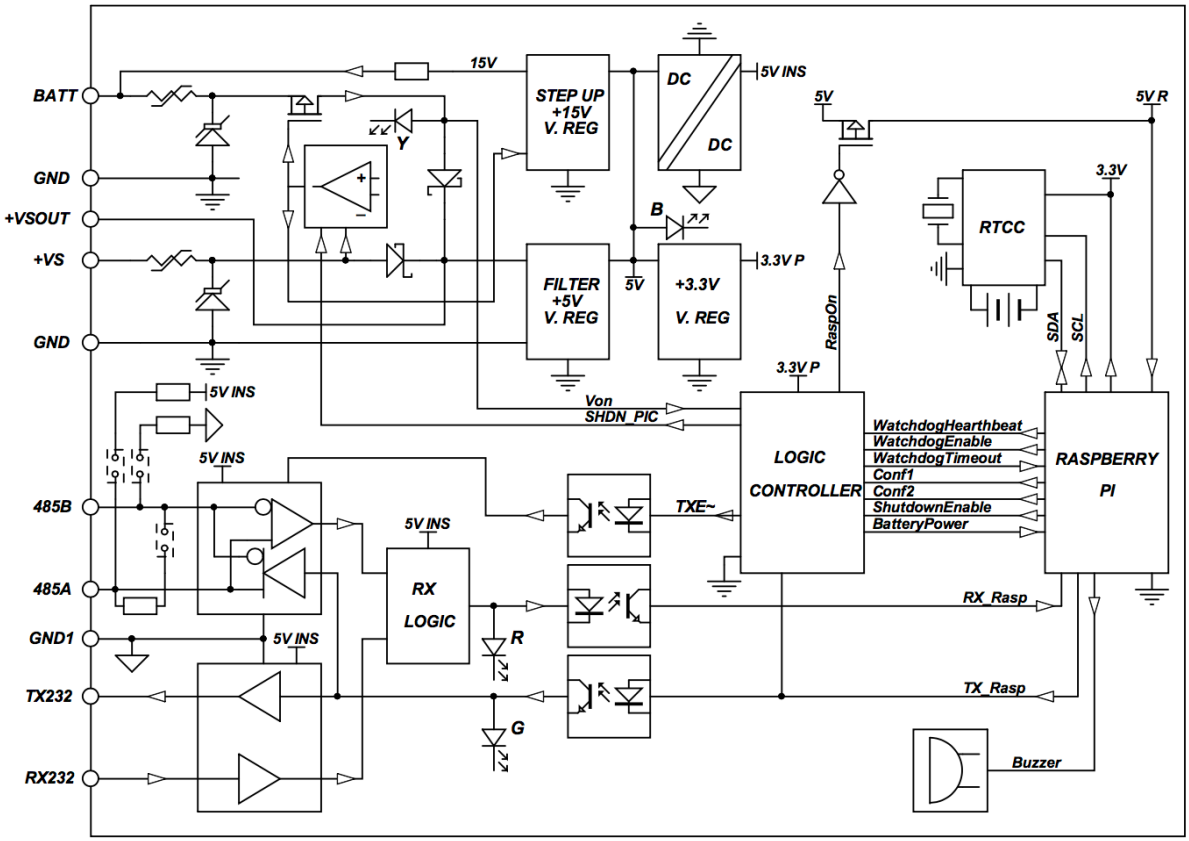

STRATO PI UPS BLOCK DIAGRAM

Technical specifications

Power supply	9-28V⎓ (VDC) Reverse polarity protection with 1.1A resettable fuse. Surge protection up to ±1000V/2ohms 1.2/50µs
Battery input	12V lead acid battery (not provided). Suggested capacity: 1.2Ah. Reverse polarity protection with 1.1A resettable fuse. Surge protection up to ±500V/2ohms 1.2/50µs
UPS battery maximum charge voltage	15V
UPS battery charge current	30mA
Voltage threshold for switching to battery mode	7.2V, 0.2V hysteresis
Current consumption at VS+ 12V⎓ including Raspberry Pi 3 current, with low CPU/GPU load and no USB devices connected	150mA w/o Ethernet and battery 180mA with Ethernet, battery and RS-485 Actual current consumption may vary based on working conditions
Current consumption at VS+ 24V⎓ including Raspberry Pi 3 current, with low CPU/GPU load and no USB devices connected	85mA w/o Ethernet and battery 100mA with Ethernet, battery and RS-485 Actual current consumption may vary based on working conditions
Raspberry platform compatibility	Pi 3 Model B+ Pi 3 Model B Pi 2 Model B (only tested with Pi 3 for CE and FCC compliance)
Serial communication ports	RS-485 Half-Duplex with automatic data direction management RS-232 Full-Duplex
Baud Rates on COMM ports	1200 to 115200
ESD-Protection Voltage on RS-232 TX/RX	±15kV human body model ±8kV contact discharge
ESD-Protection Voltage on RS-485 A/B	±15kV human body model ±8kV contact discharge
Surge protection on RS-485 A/B	Surge protection up to ±500V/2ohms 1.2/50µs; 600W peak pulse power capability at 10/1000µs waveform
Fail safe feature on RS-485	Yes

Real time clock	Internal RTCC circuit with backup lithium battery. Only use CR1025 Lithium / Manganese Dioxide (Li/MnO2) batteries. Expected battery life without main power supply: ~2 years
Housing	standard 4M for DIN rail
Operating temperature	0…+50 °C
Storage temperature	-20…+70 °C
Protection degree	IP20
Weight	35 g (Strato Pi UPS board) 155 g (Strato Pi UPS server)

Dimensions

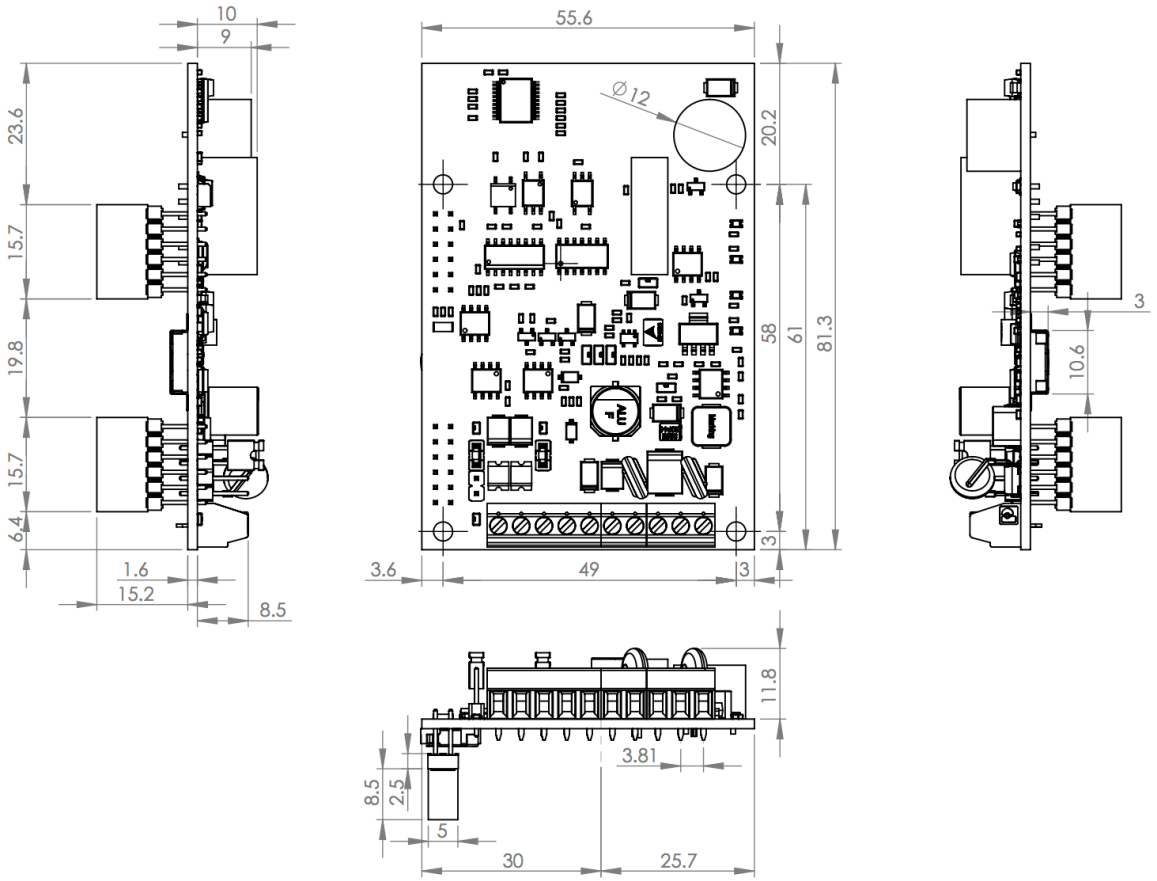

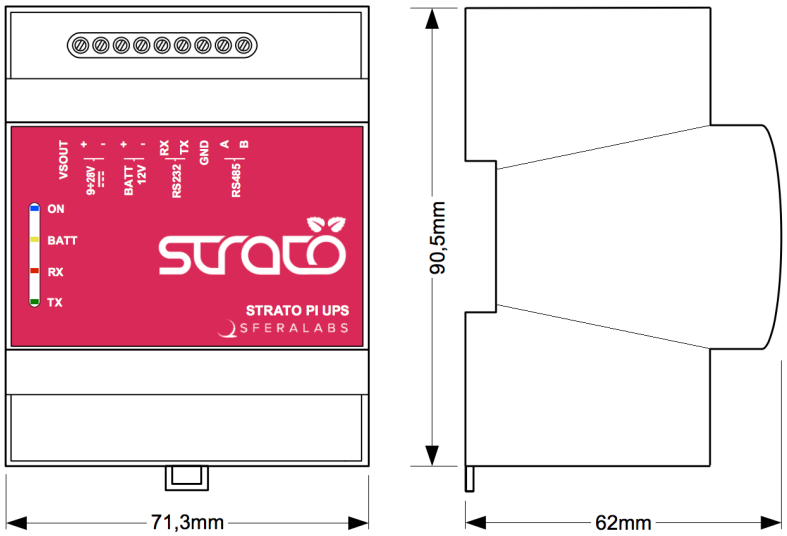

DIMENSIONS (mm)

Disposal

Waste Electrical & Electronic Equipment

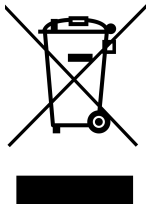

(Applicable in the European Union and other European countries with separate collection systems). This marking on the product, accessories or literature indicates that the product should not be disposed of with other household waste at the end of their working life. To prevent possible harm to the environment or human health from uncontrolled waste disposal, separate these items from other types of waste and recycle them responsibly to promote the sustainable reuse of material resources. Household users should contact either the retailer where they purchased this product, or their local government office, for details of where and how they can take these items for environmentally safe recycling. This product and its electronic accessories should not be mixed with other commercial wastes for disposal.

Strato Pi UPS contains a small non rechargeable manganese dioxide lithium coin battery.

In the Strato Pi UPS server, the battery is not accessible from the outside. You should first remove the case top body to gain access to the Strato Pi UPS circuit board. Always remove the battery before disposing of this product.

Installation and use restrictions

Standards and regulations

The design and the setting up of electrical systems must be performed according to the relevant standards, guidelines, specifications and regulations of the relevant country. The installation, configuration and programming of the devices must be carried out by trained personnel.

The installation and wiring of connected devices must be performed according to the recommendations of the manufacturers (reported on the specific data sheet of the product) and according to the applicable standards.

All the relevant safety regulations, e.g. accident prevention regulations, law on technical work equipment, must also be observed.

Safety instructions

Carefully read the safety information section at the beginning of this document.

Set-up

For the first installation of the device proceed according to the following procedure:

- ✓ make sure all power supplies and the external battery are disconnected
- ✓ install and wire the device according to the schematic diagrams on the specific product user guide
- ✓ after completing the previous steps, switch on the power supply and other related circuits.

Conformity Information

EU

This device complies with the essential requirements of the following directives and harmonised standards:

- ✓ 2014/35/UE (Low Voltage)
- ✓ 2014/30/UE (EMC)
- ✓ EN61000-6-2:2005 (EMC Immunity)
- ✓ EN60664-1:2007 (Electrical safety)
- ✓ EN61000-6-4:2007 (Emission for industrial environments)
- ✓ 2011/65/UE (RoHS)

The declaration of conformity is available on the internet at the following address: https://www.sferalabs.cc/strato-pi/

USA

This equipment has been tested and found to comply with the limits for a Class A digital device, pursuant to Part 15 of the FCC Rules. These limits are designed to provide reasonable protection against harmful interference when the equipment is operated in a commercial environment. This equipment generates, uses, and can radiate radio frequency energy and, if not installed and used in accordance with the instruction manual, may cause harmful interference to radio communications. Operation of this equipment in a residential area is likely to cause harmful interference in which case the user will be required to correct the interference at his own expense. The end user of this product should be aware that any changes or modifications made to this equipment without the approval of the manufacturer could result in the product not meeting the Class A limits, in which case the FCC could void the user's authority to operate the equipment.

Shielded cables must be used with this equipment to maintain compliance with FCC regulations.

This device complies with Part 15 of the FCC Rules. Operation is subject to the following two conditions: (1) this device may not cause harmful interference, and (2) this device must accept any interference received, including interference that may cause undesired operation.

CANADA

This Class A digital apparatus complies with Canadian ICES-003 (A).

Cet appareil numérique de la classe A est conforme à la norme NMB-003 (A) du Canada.

AUSTRALIA / NEW ZEALAND

WARNING: This equipment is compliant with Class A of CISPR 32:2015. In a residential environment, this equipment may cause radio interference.

Compliance information for Raspberry Pi 3 Model B

Strato Pi UPS server model SPMU21X contains a standard Raspberry Pi 3 Model B single board computer. This board has WiFi and Bluetooth radios. It is user accessible and replaceable.

EU

Raspberry Pi 3 Model B is in conformity with the essential requirements and other relevant requirements of the Radio Equipment Directive 2014/53/EU.

USA

Raspberry Pi 3 Model B FCC IDENTIFIER: **2ABCB-RPI32**

The antenna(s) used for this transmitter must be installed to provide a separation distance of at least 20 cm from all persons and must not be colocated or operating in conjunction with any other antenna or transmitter, except in accordance with FCC multitransmitter product guidelines. This (WiFi DTS) device has 20 MHz bandwidth mode.

CANADA

Raspberry Pi 3 Model B IC CERTIFICATION No.: **20953-RPI32**

This device complies with Industry Canada license-exempt RSS standard(s). Operation is subject to the following two conditions: (1) this device may not cause interference, and (2) this device must accept any interference, including interference that may cause undesired operation of the device.

Le présent appareil est conforme aux CNR d'Industrie Canada applicables aux appareils radio exempts de licence. L'exploitation est autorisée aux deux conditions suivantes: (1) l'appareil ne doit pas produire de brouillage, et (2) l'utilisateur de l'appareil doit accepter tout brouillage radioélectrique subi, même si le brouillage est susceptible d'en compromettre le fonctionnement.

Compliance information for Raspberry Pi 3 Model B+

Strato Pi UPS server model SPMU21XP contains a standard Raspberry Pi 3 Model B+ single board computer. This board has WiFi and Bluetooth radios. It is user accessible and replaceable.

EU

Raspberry Pi 3 Model B+ is in conformity with the essential requirements and other relevant requirements of the Radio Equipment Directive 2014/53/EU.

USA

Raspberry Pi 3 Model B+ FCC IDENTIFIER: **2ABCB-RPI3BP**

The antenna(s) used for this transmitter must be installed to provide a separation distance of at least 20 cm from all persons and must not be colocated or operating in conjunction with any other antenna or transmitter, except in accordance with FCC multitransmitter product guidelines. This (WiFi DTS) device has 20 MHz bandwidth mode.

CANADA

Raspberry Pi 3 Model B+ IC CERTIFICATION No.: **20953-RPI3P**

This device complies with Industry Canada license-exempt RSS standard(s). Operation is subject to the following two conditions: (1) this device may not cause interference, and (2) this device must accept any interference, including interference that may cause undesired operation of the device.

Le présent appareil est conforme aux CNR d'Industrie Canada applicables aux appareils radio exempts de licence. L'exploitation est autorisée aux deux conditions suivantes: (1) l'appareil ne doit pas produire de brouillage, et (2) l'utilisateur de l'appareil doit accepter tout brouillage radioélectrique subi, même si le brouillage est susceptible d'en compromettre le fonctionnement.